IFIC
06/02/2020

The DUNE Photon Detection System

Anselmo Cervera Villanueva
IFIC-Valencia

Detector modules

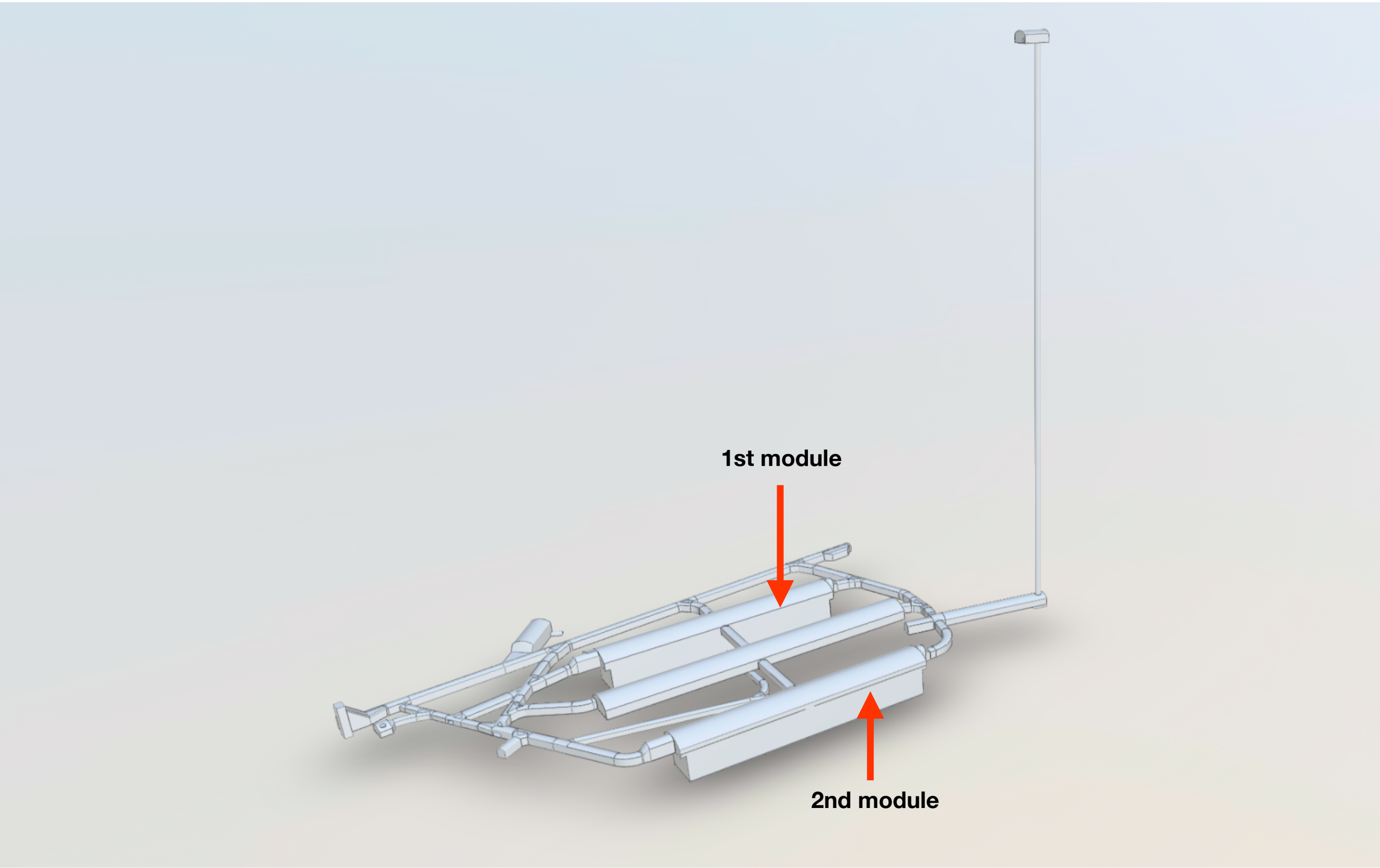

Far detector

Four 10 Kton fiducial mass (17 Kton total)
Liquid Argon TPCs

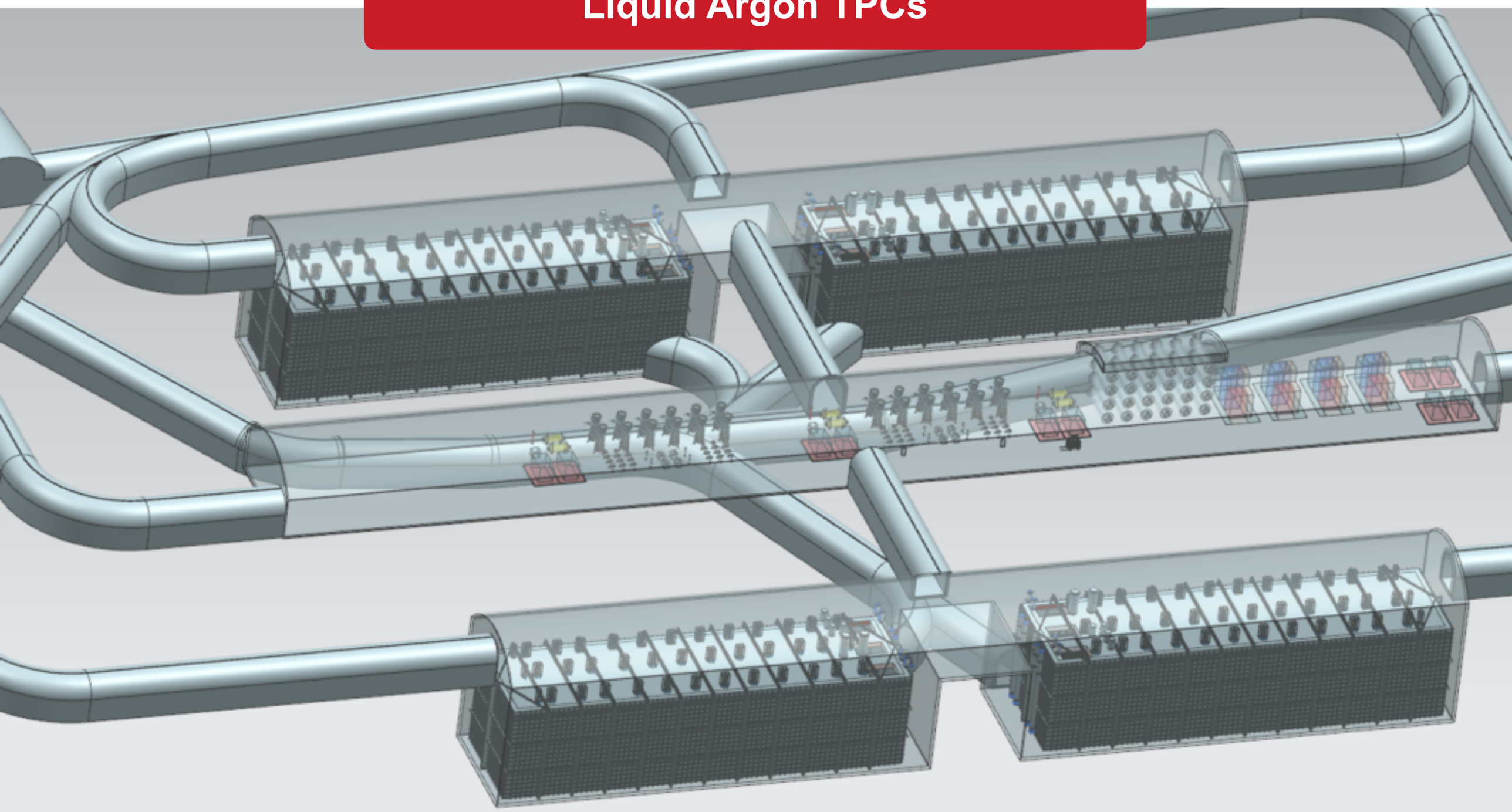

The cryostat

Should be able to keep Argon at 87 K, with minimal loses

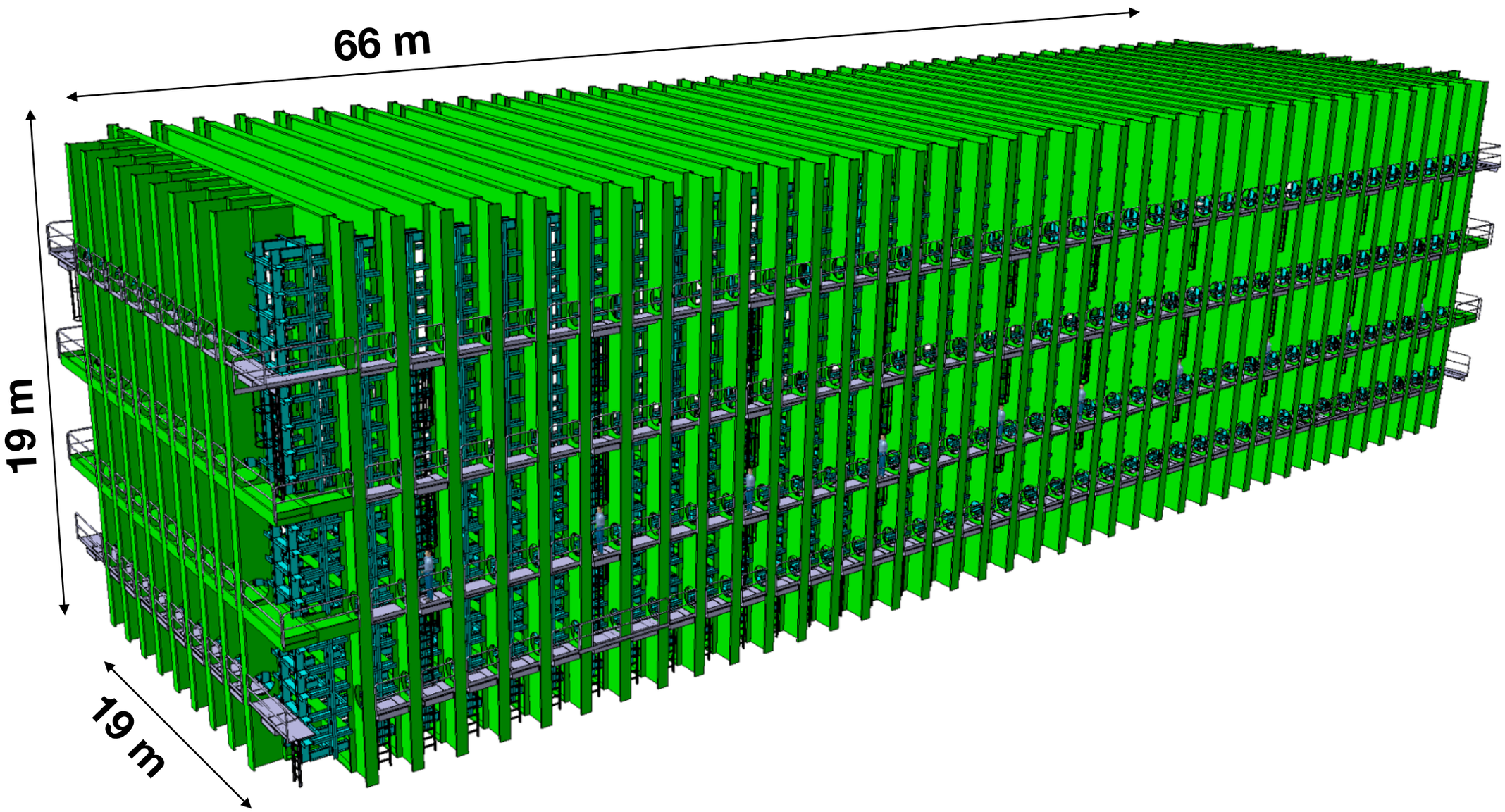

Far detectors: 1st module

Single-Phase

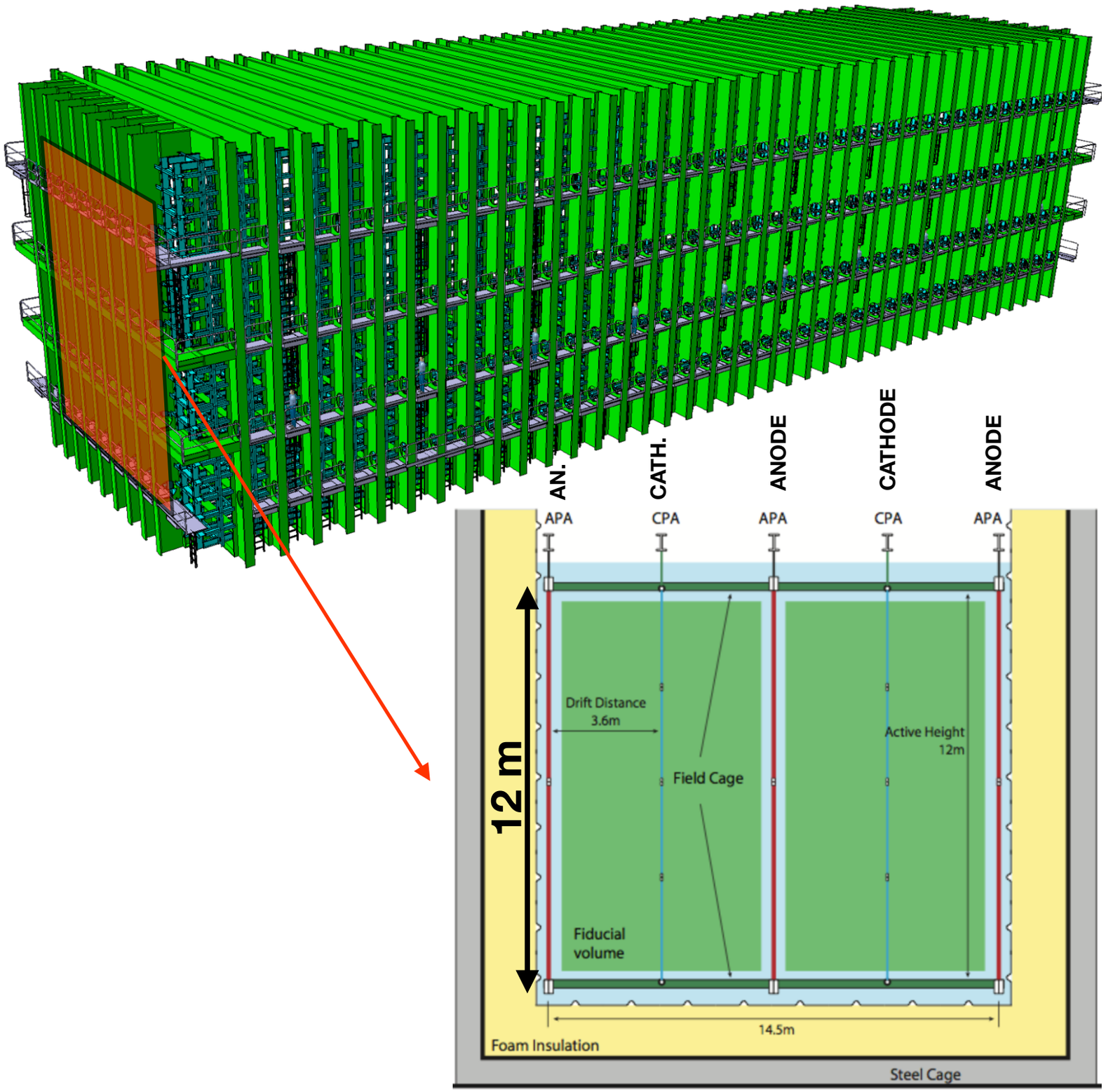

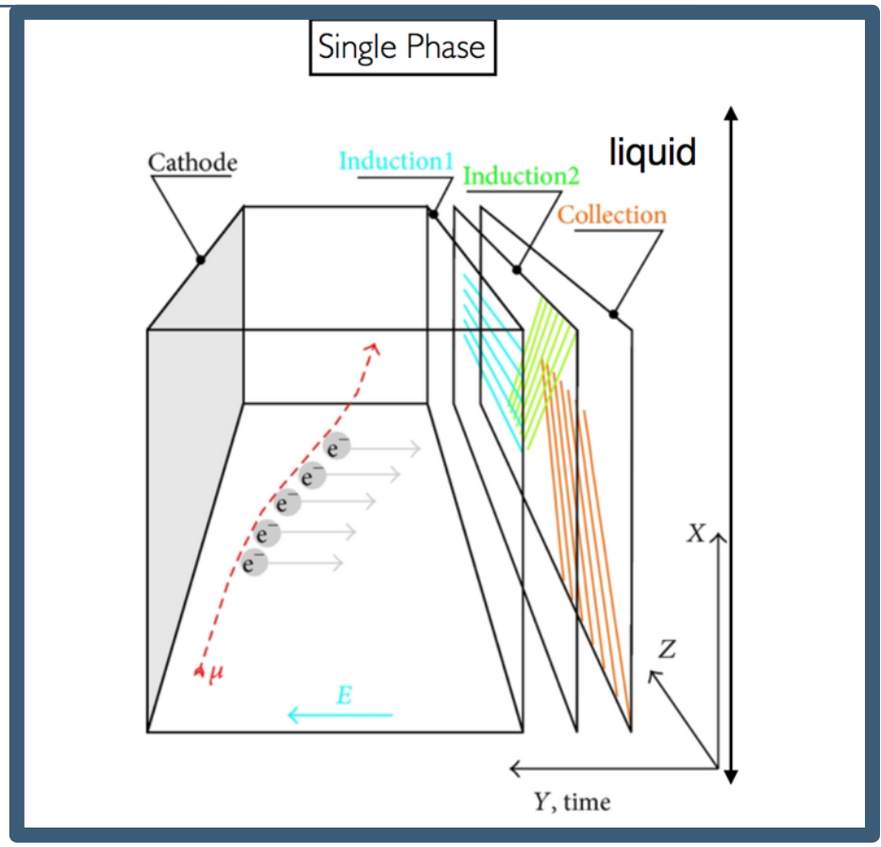

180,000 volts between cathode and anode

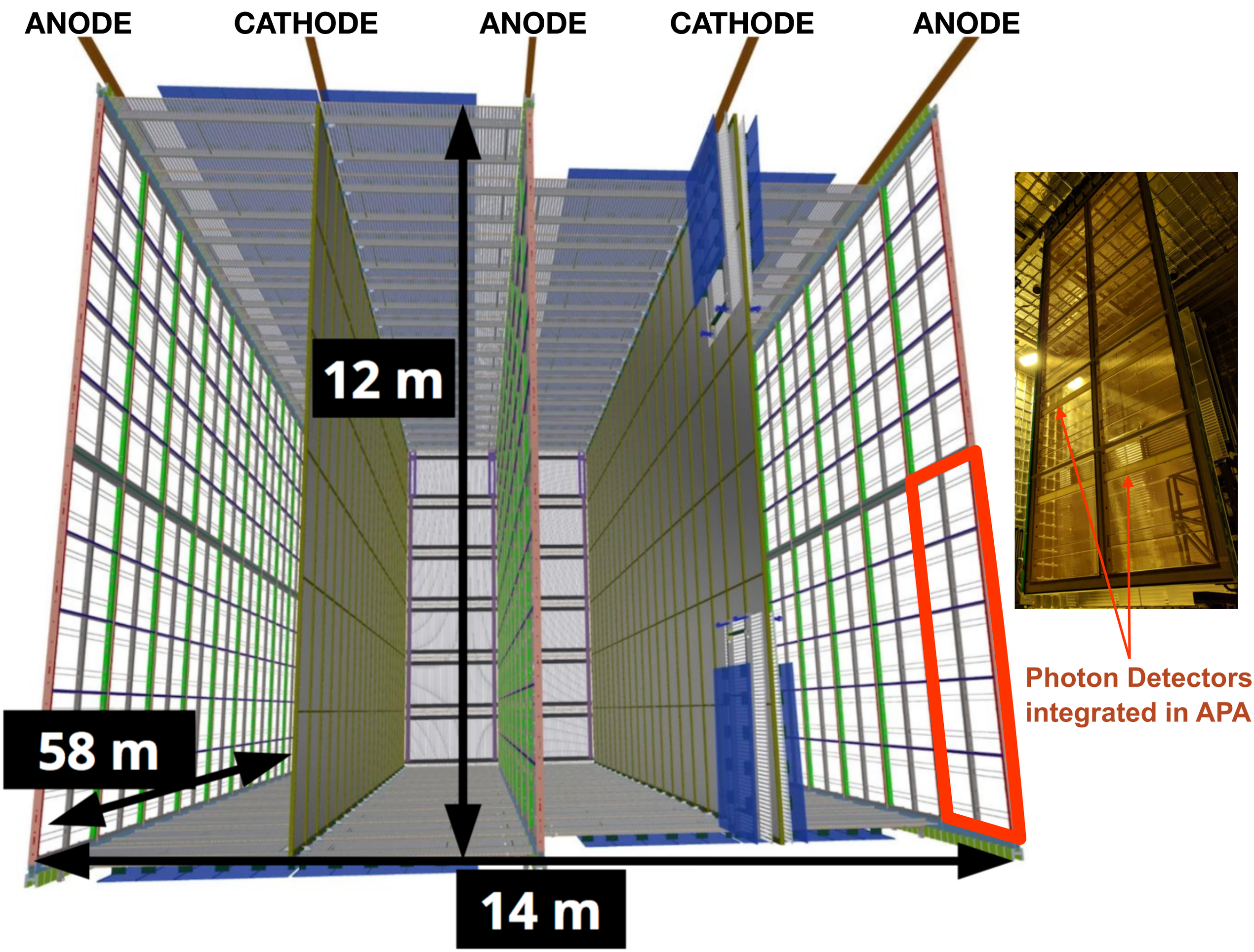
ANODE
CATHODE
ANODE
CATHODE
ANODE
12 m
58 m
14 m
Photon Detectors
integrated in APA

Time Projection Chamber (TPC)

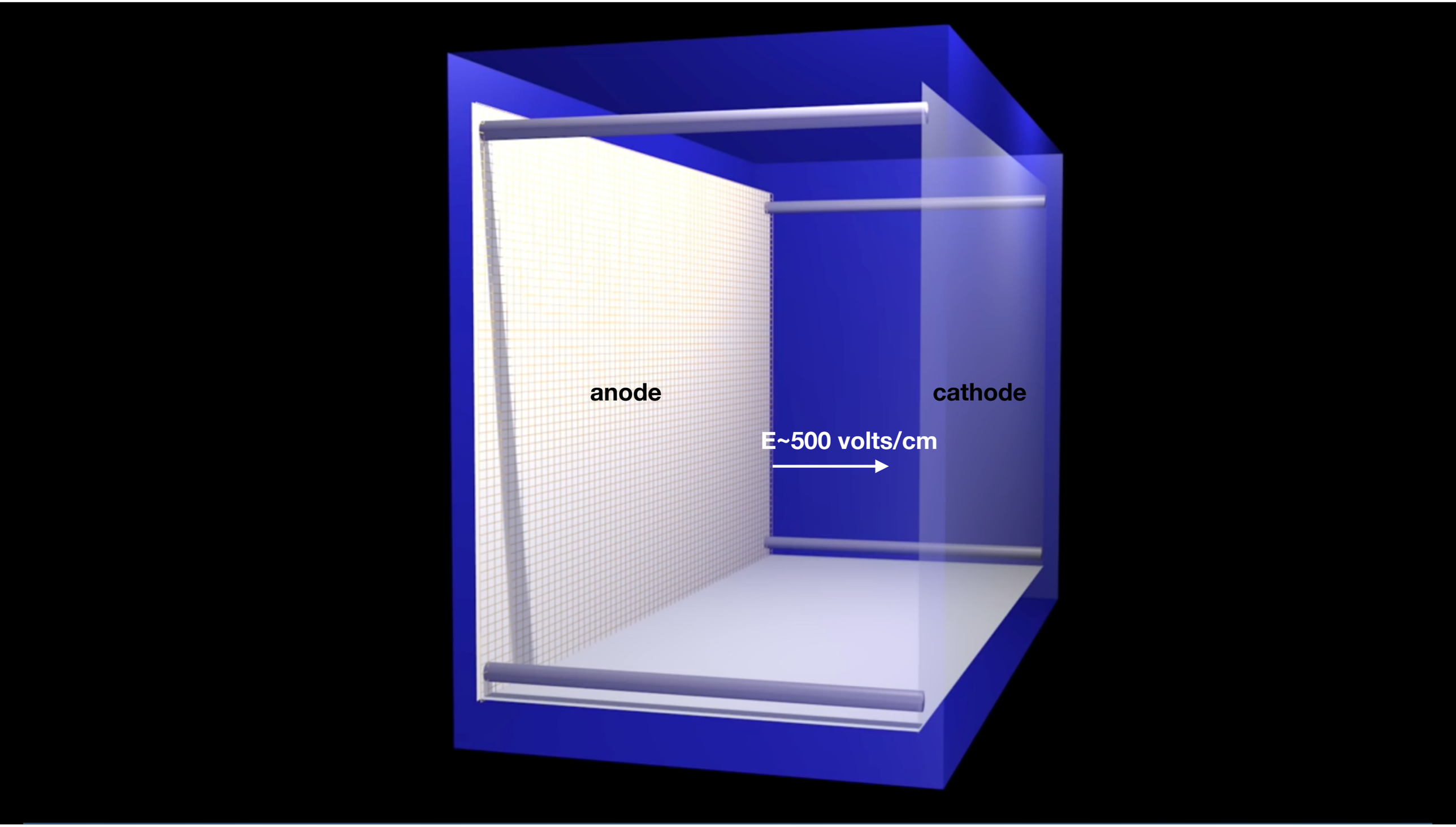

Photon detection

TPC is slow, photons are fast

They give precise time for nucleon decays and supernova neutrinos

Time → precise location

Like using lightning and thunder to find distance.

ProtoDUNE cryostat

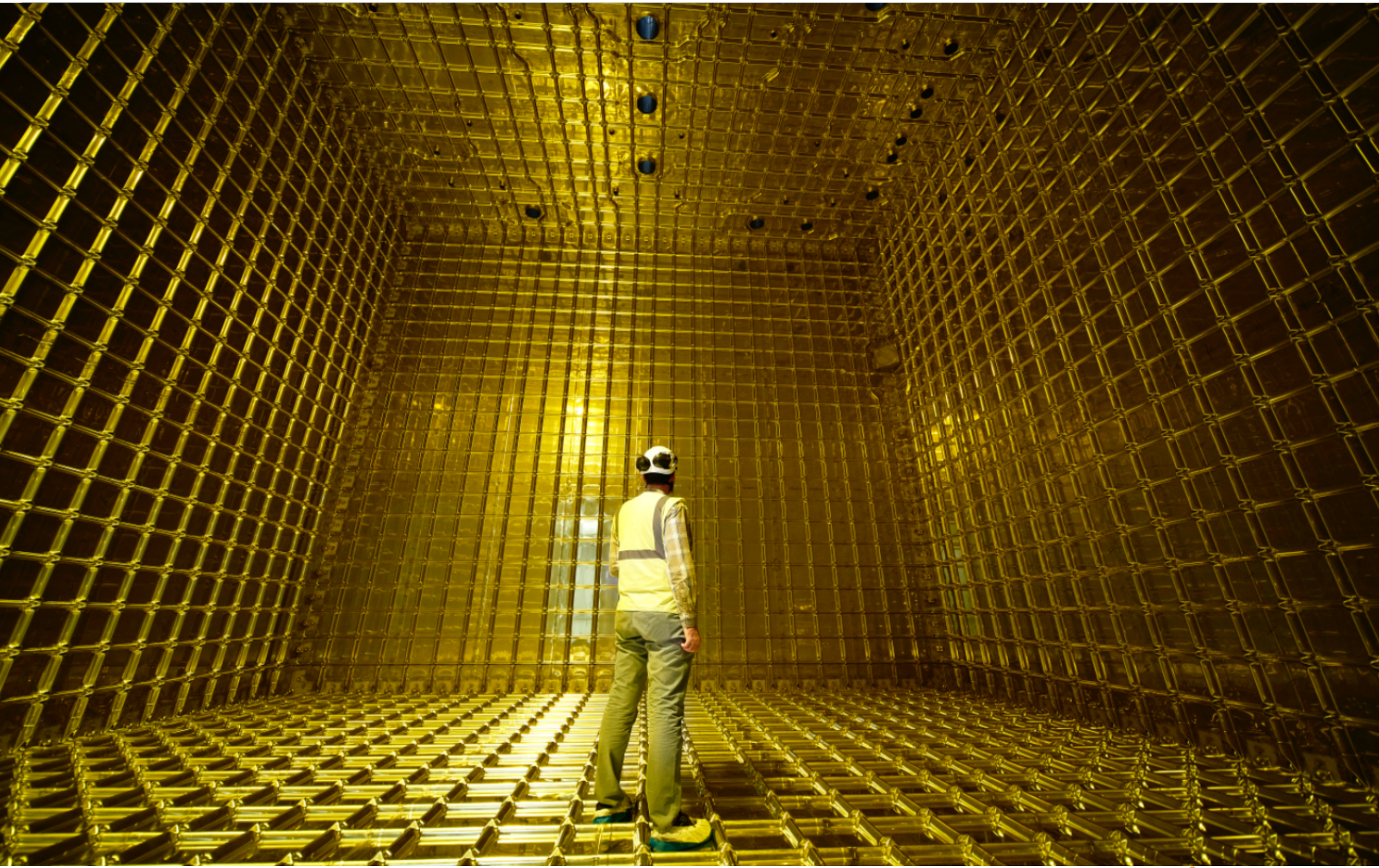

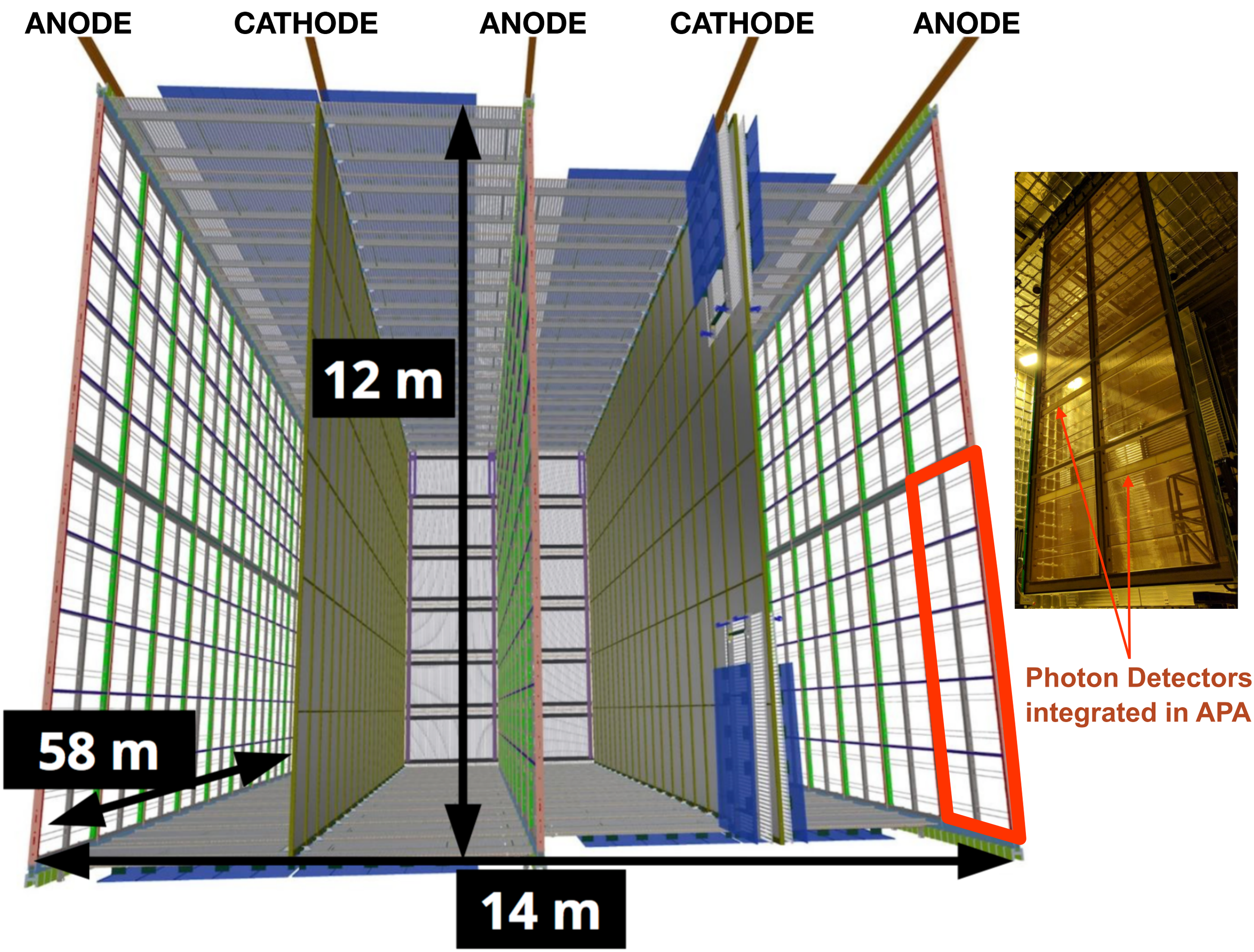
ANODE
CATHODE
ANODE
CATHODE
ANODE
12 m
58 m
14 m
Photon Detectors
integrated in APA

Single-phase TPC Slice

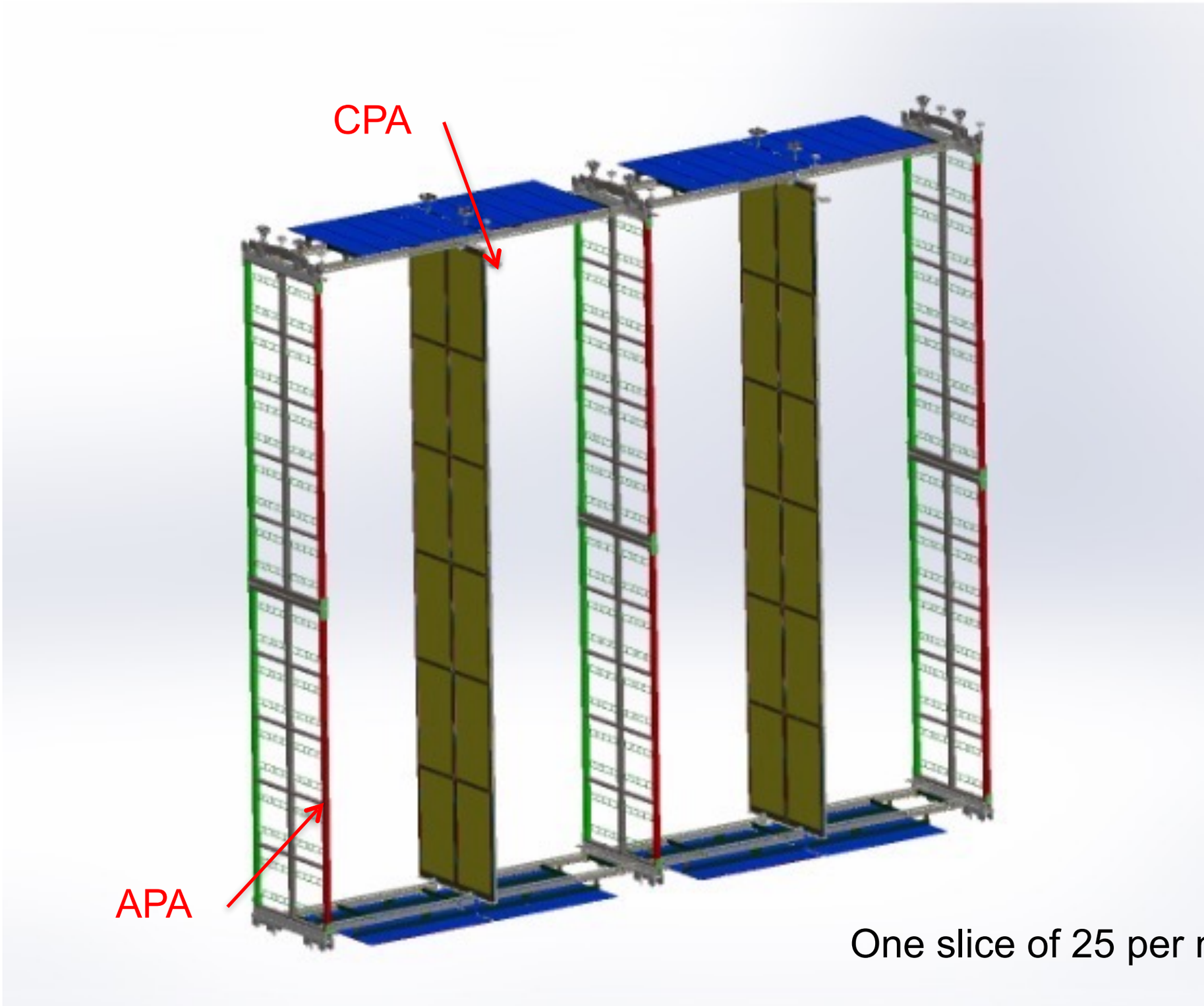

One slice of 25 per module

DUNESP Detector Design

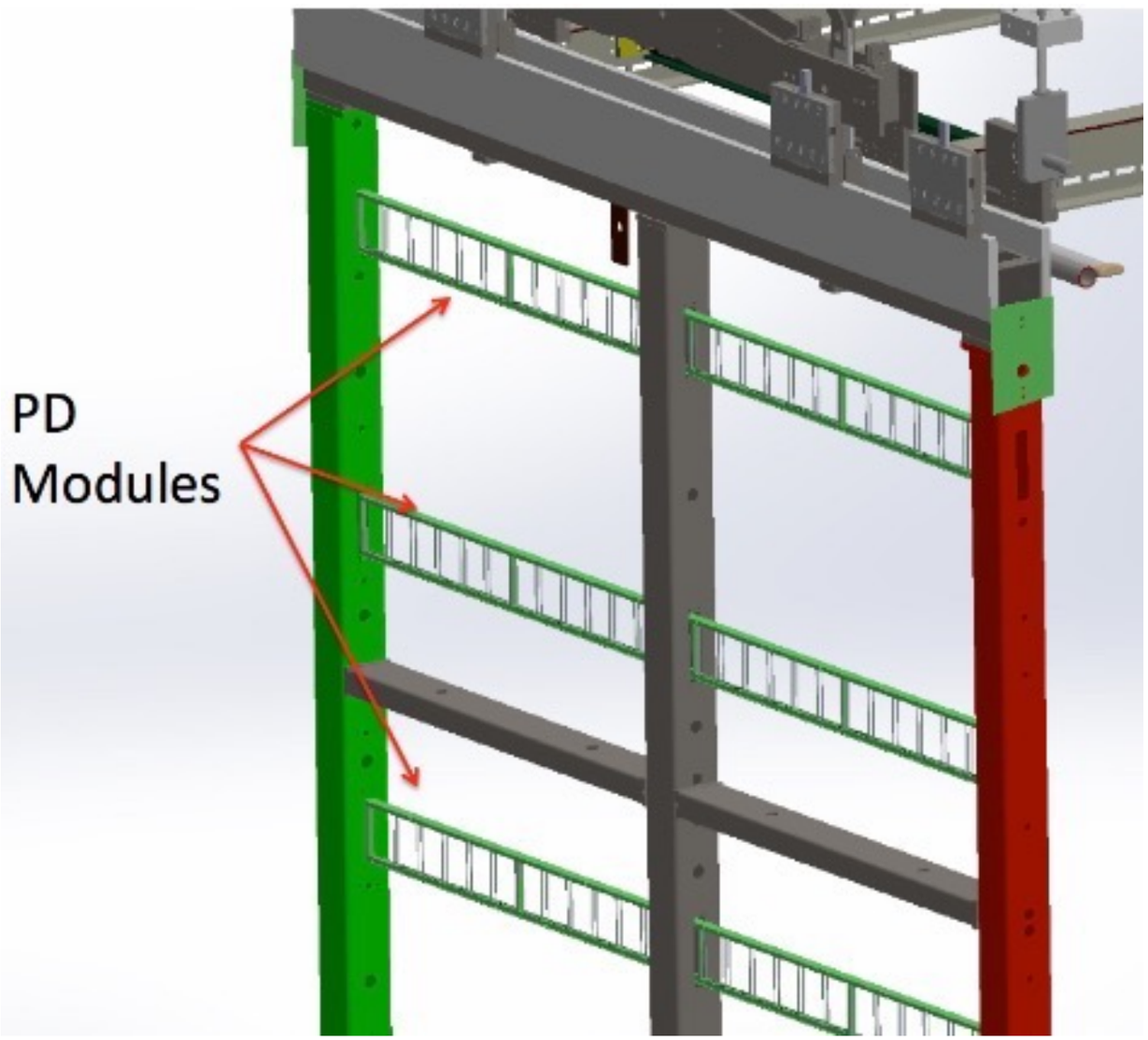

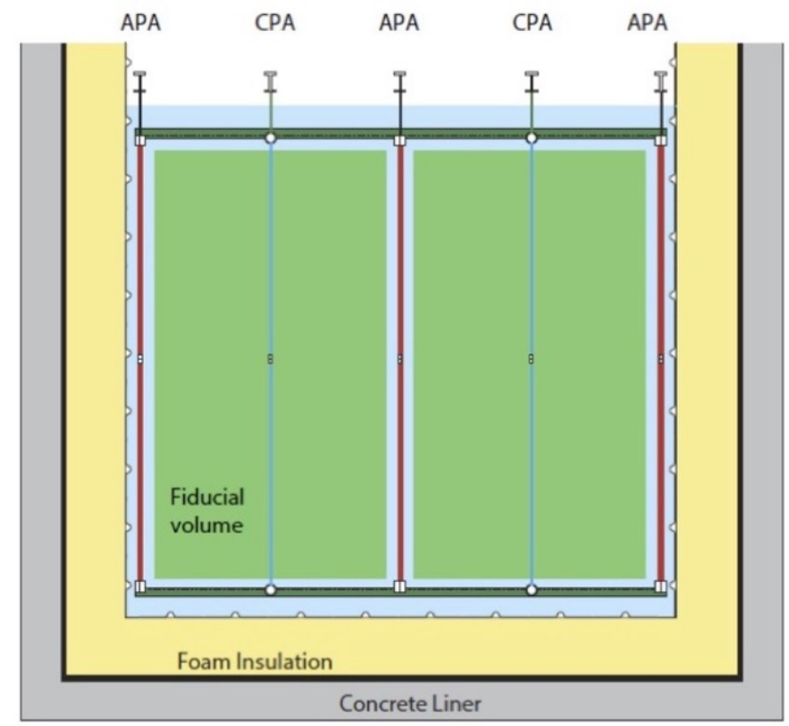

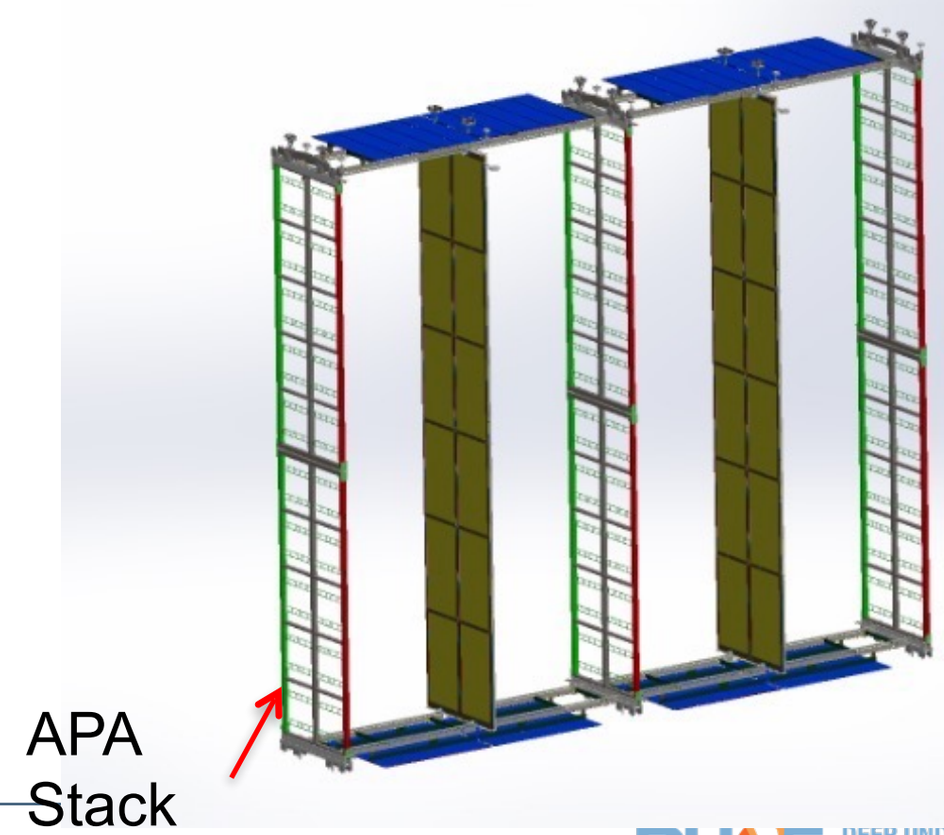

ARAPUCA modules in protoDUNE

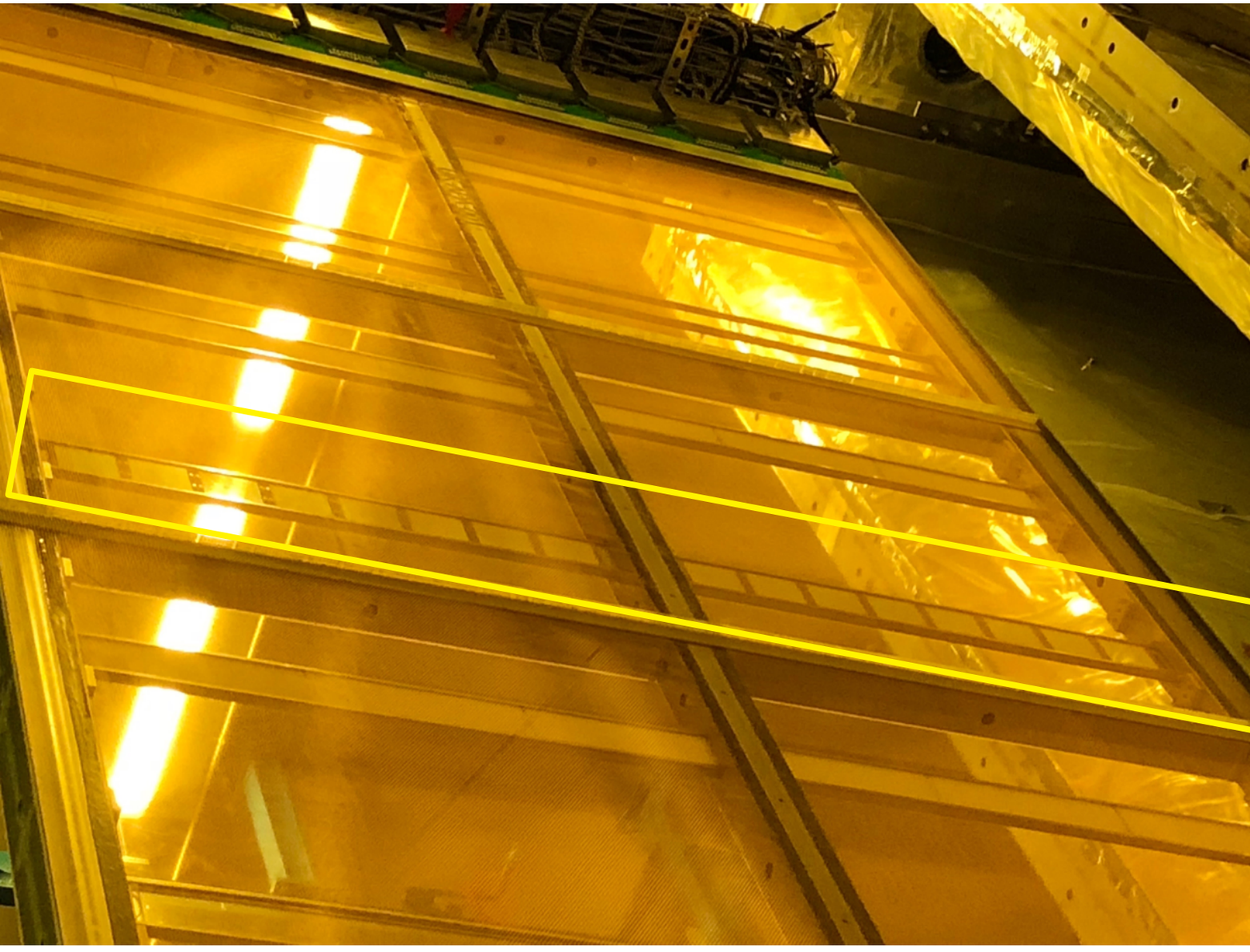

Two ARAPUCA arrays installed in protoDUNE (**APA#3** – close to the beam and **APA#4** -opposite side)

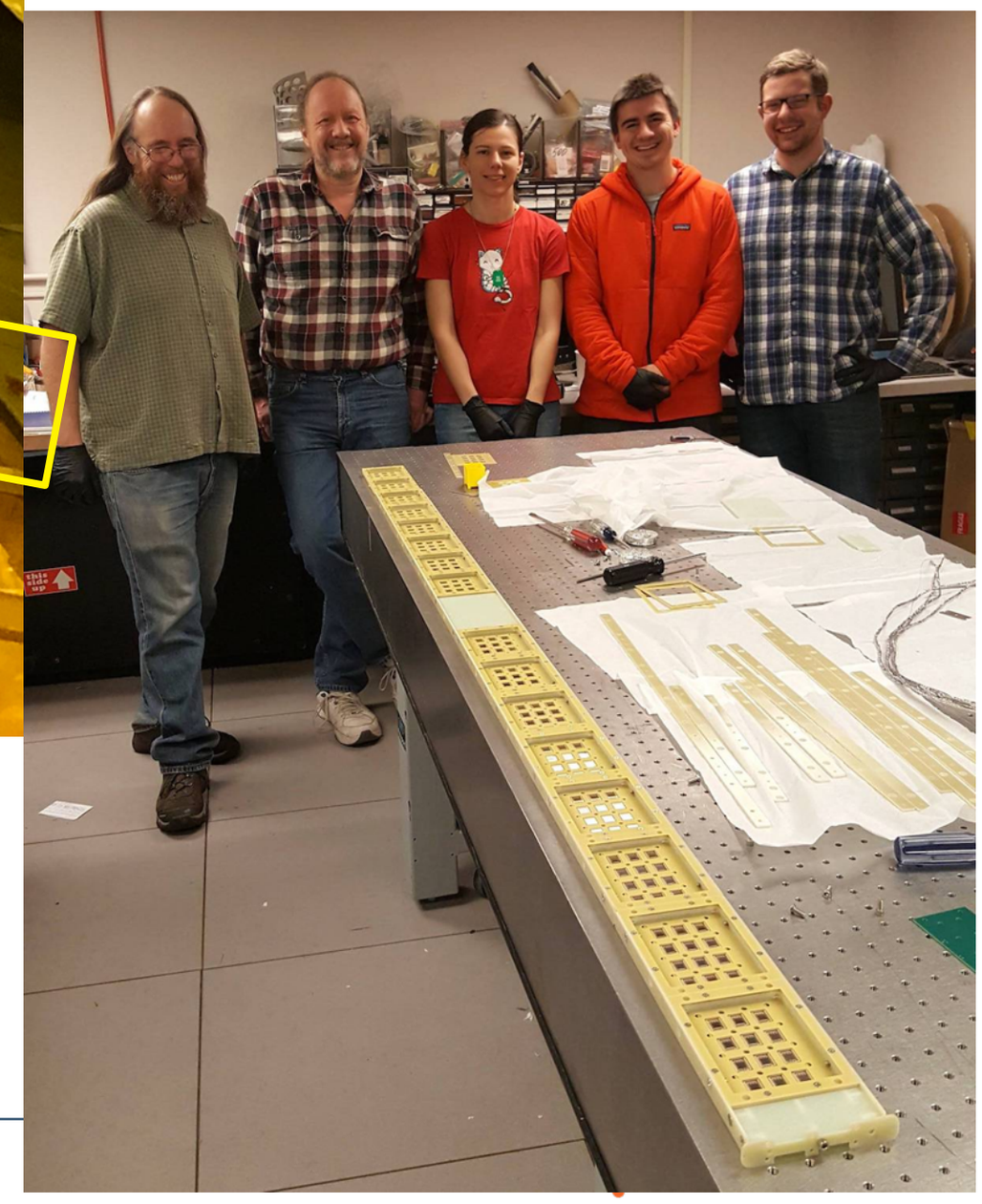

Each array hosts ***16 ARAPUCA cells*** (10 cm x 8 cm) and each cell is *read-out by 12* (*6*) Hamamatsu MPPCs passively ganged together.

ProtoDUNE ARAPUCA array assembled by CSU group

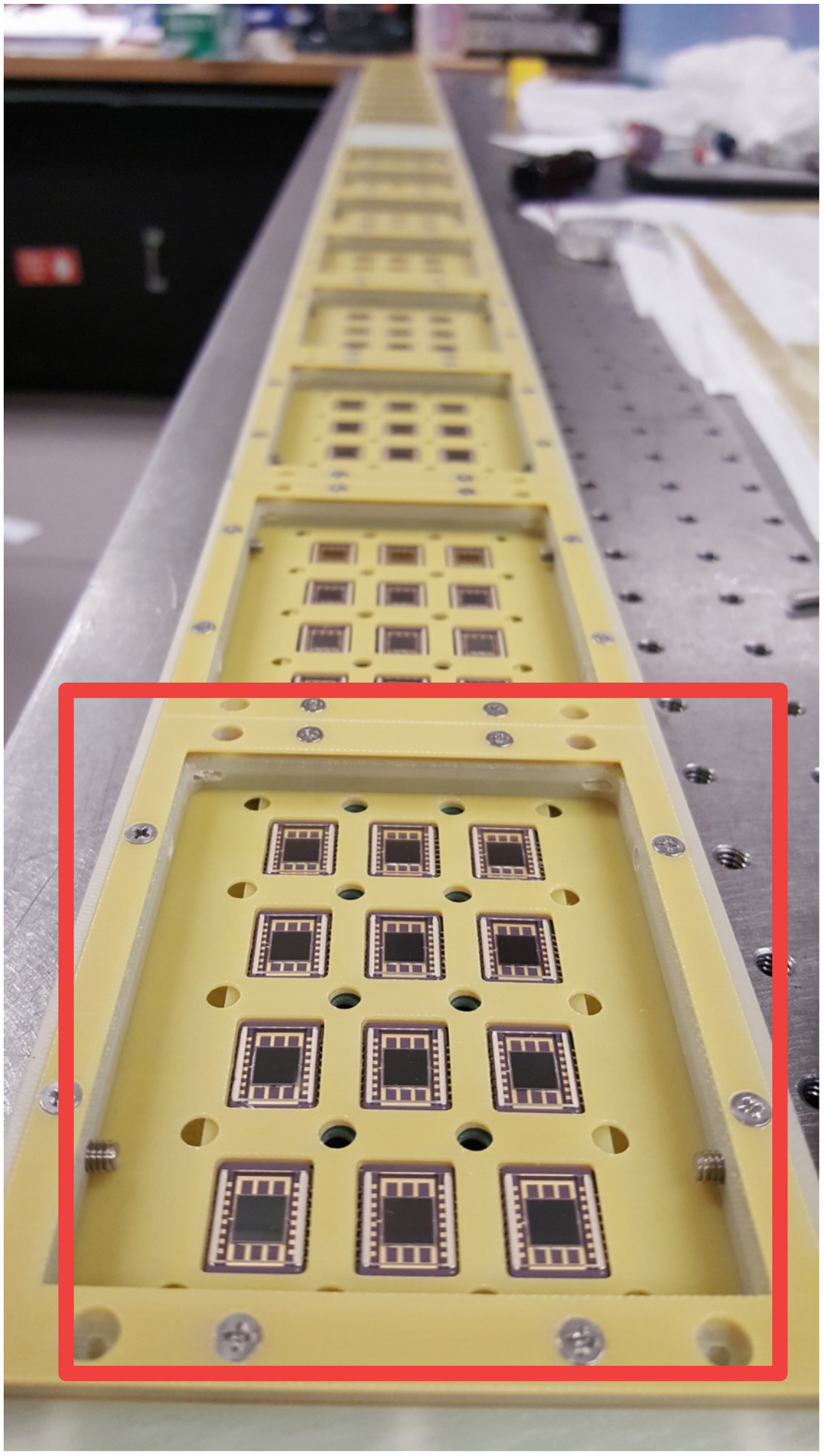

- Acceptance window is a dichroic filter with **cut-off at 400 nm**
- Filters coated externally with **p-TerPhenyl** *(pTP emission wavelength 350 nm)*
- Each cell is lined with **VIKUITI reflective** foils (not shown in this picture) *(reflectivity > 98%)* - coated with a thin **TetraPhenyl-Butadiene** film *(TPB - emission wavelength 430 nm)*
- *ProtoDUNE ARAPUCAs are working and taking data-- Effective Detection Efficiency of 2.05% in ProtoDUNE Beam-on running*
- ProtoDUNE represents an important part of the **ARAPUCA R&D** program
-

The ARAPUCA Operating Principle

- After the **first shift** the light enters the ARAPUCA since **the filter is transparent to that wavelength**
- After the **second shift** the **photon gets trapped inside the box** because the filter turns to be **reflective**
- Photons are **detected by the SiPM** after some reflections

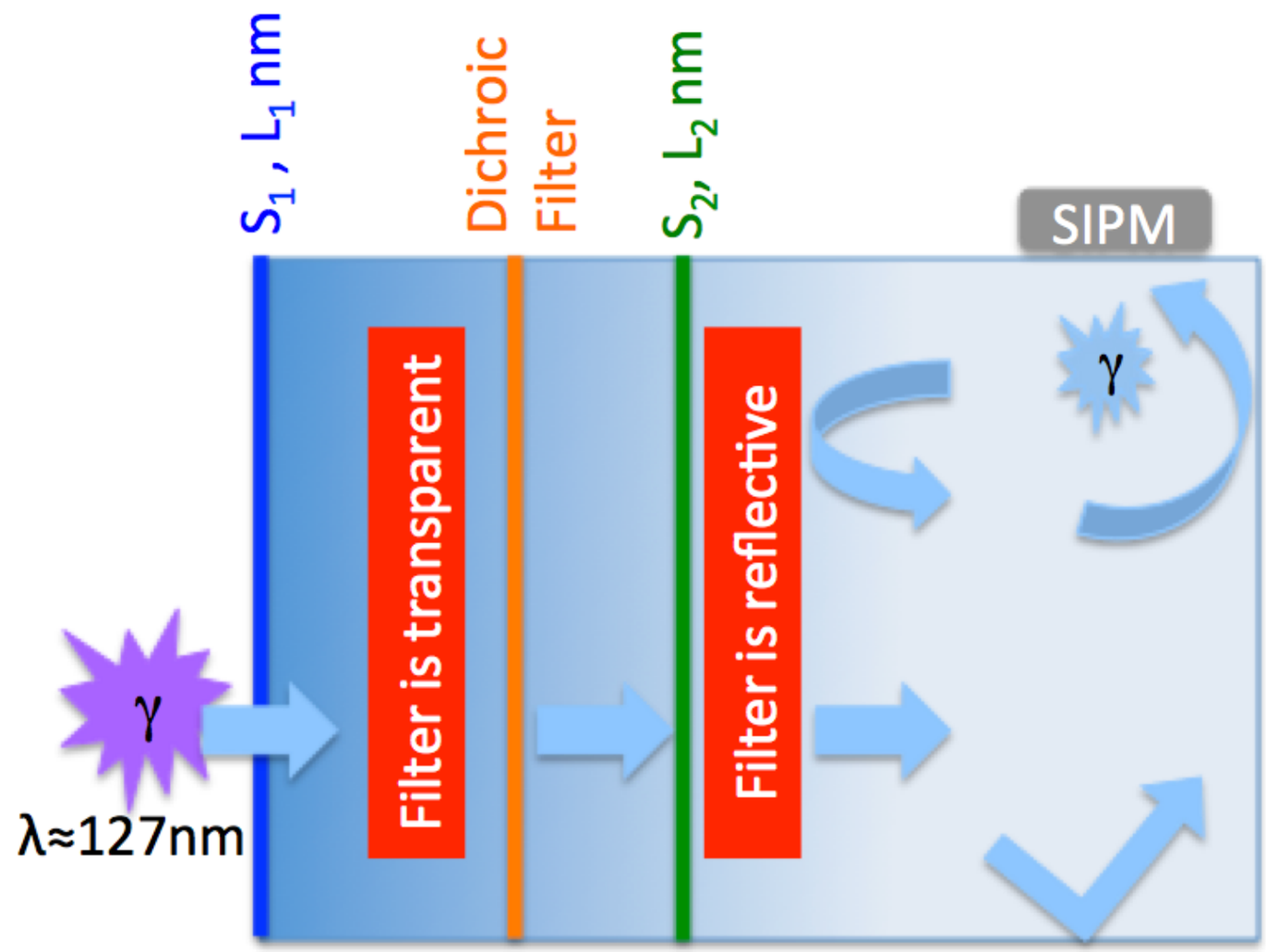

The Photon Detection System

A "light trap" collects light and brings it to silicon photosensors.

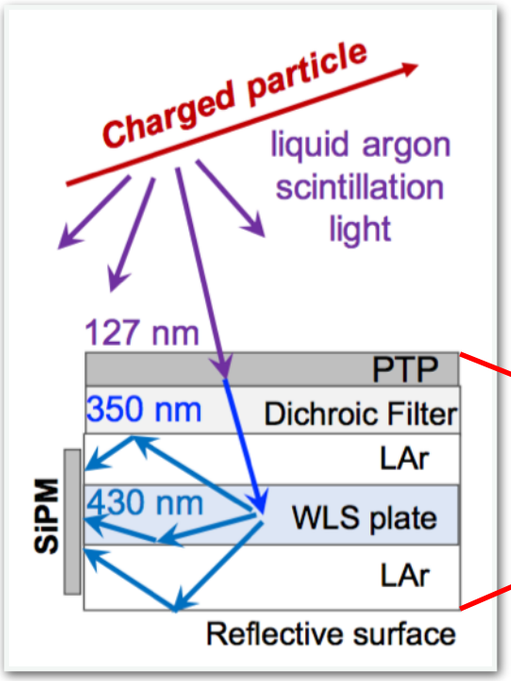

More light opens additional physics opportunities like calorimetry and triggering

Integrated Pulse Amplitude for different momenta

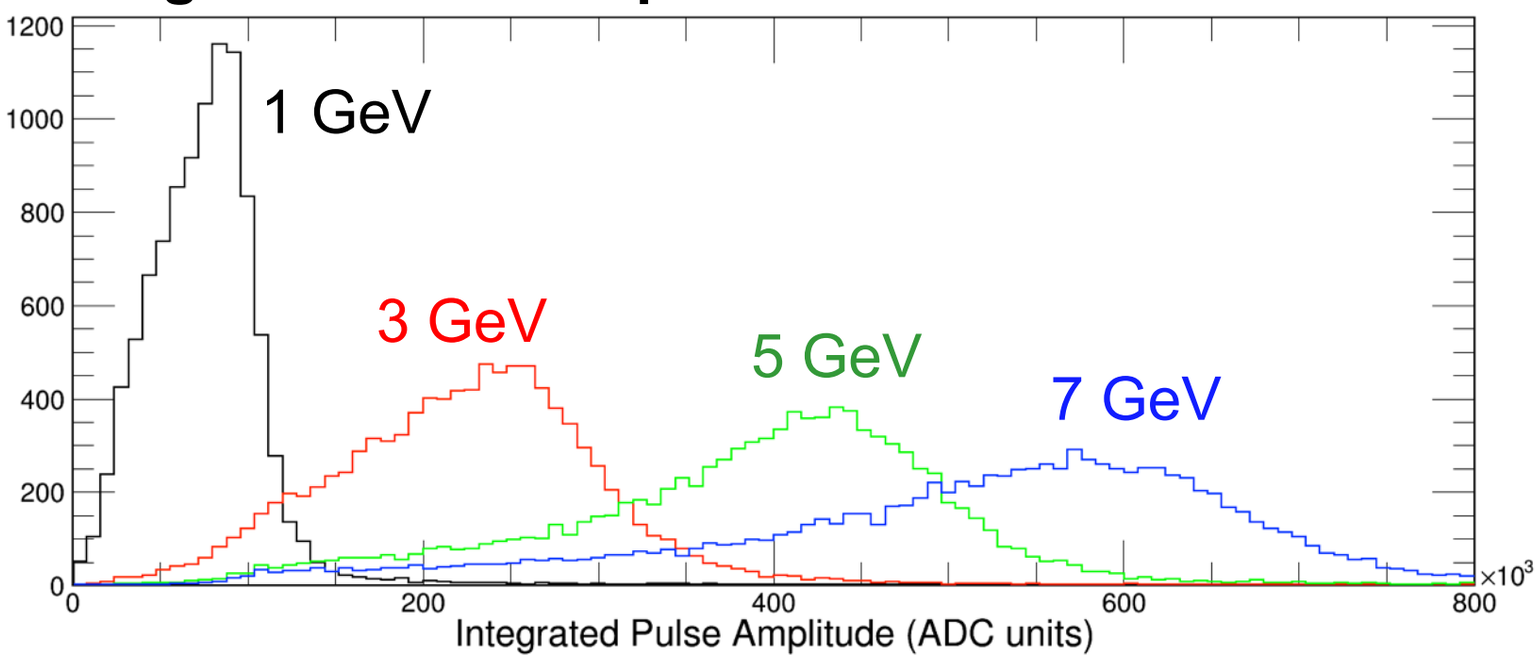

Prototypes being tested in ProtoDUNE and labs in the US and Brazil.

Dichroic filter

- The core of the device is a **dichroic filter**. It is a dielectric interference **film** deposited on a fused silica substrate.
- It has the property of being **highly transparent** for wavelengths **below a cutoff** and **highly reflective above it**.

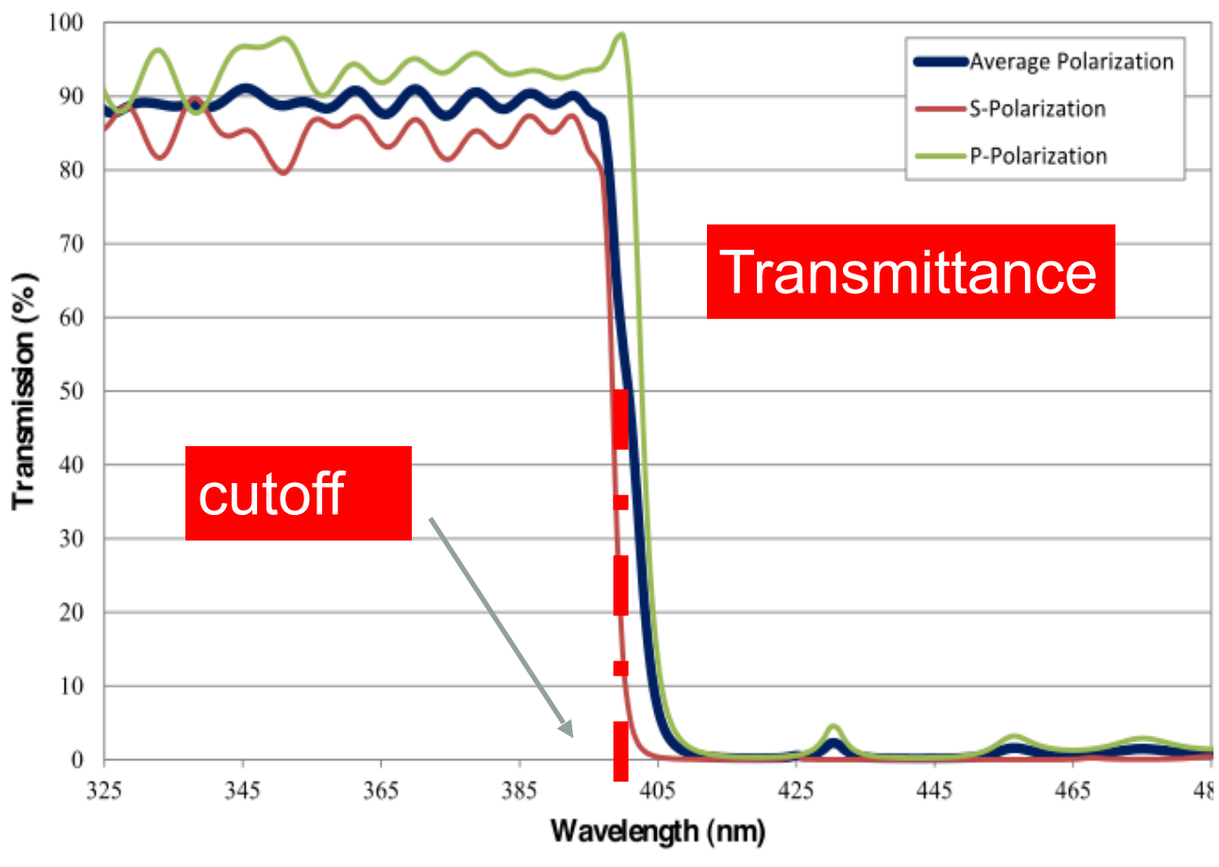

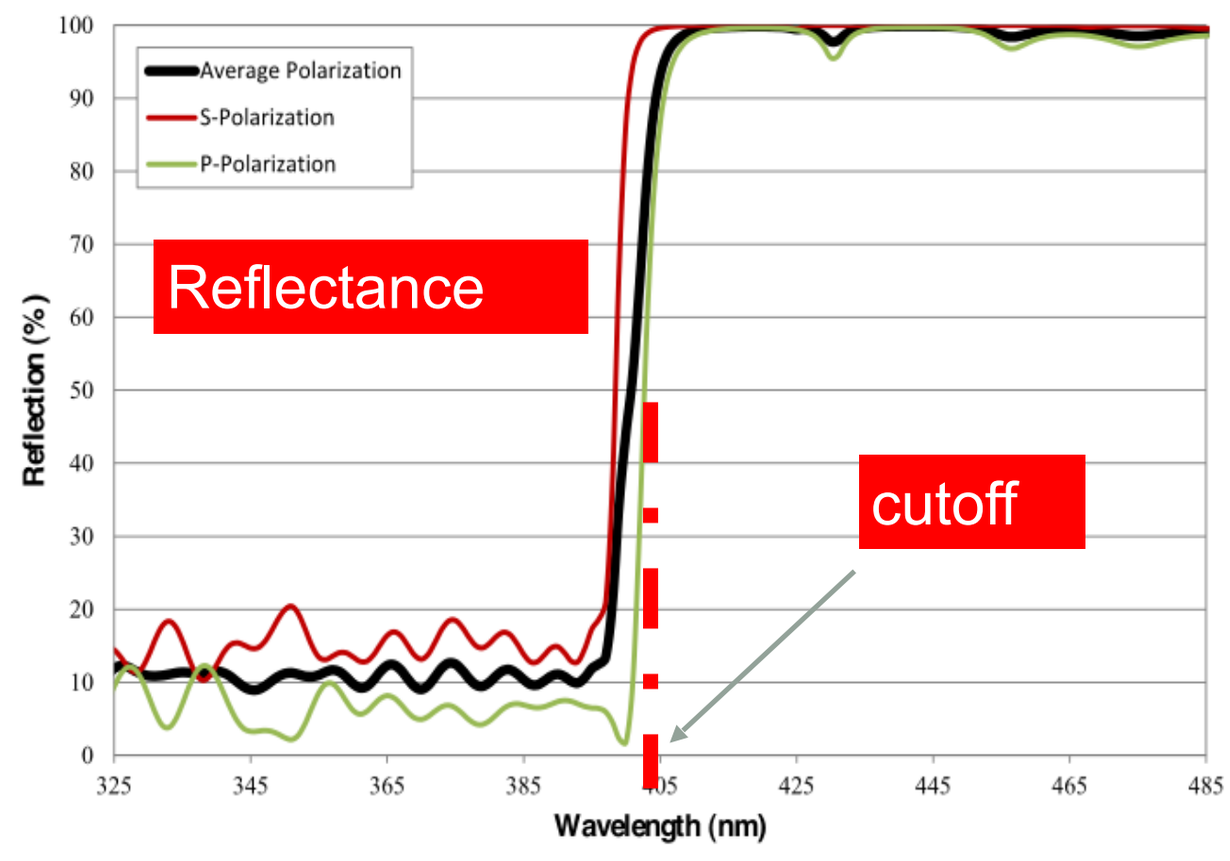

X-ARAPUCA design

- An **X-ARAPUCA module** for DUNE will have dimensions of approximately 210 cm x 12 cm, segmented into *four cells* **(supercells)**. Each supercell is an X-ARAPUCA and will host **48 photosensors** read-out by one single electronic channel
- We expect for these X-ARAPUCAs a detection efficiency *larger than 3%* (on the basis on analytical calculations, MC simulations and experimental tests). *Physics requirements will be met with this efficiency*.

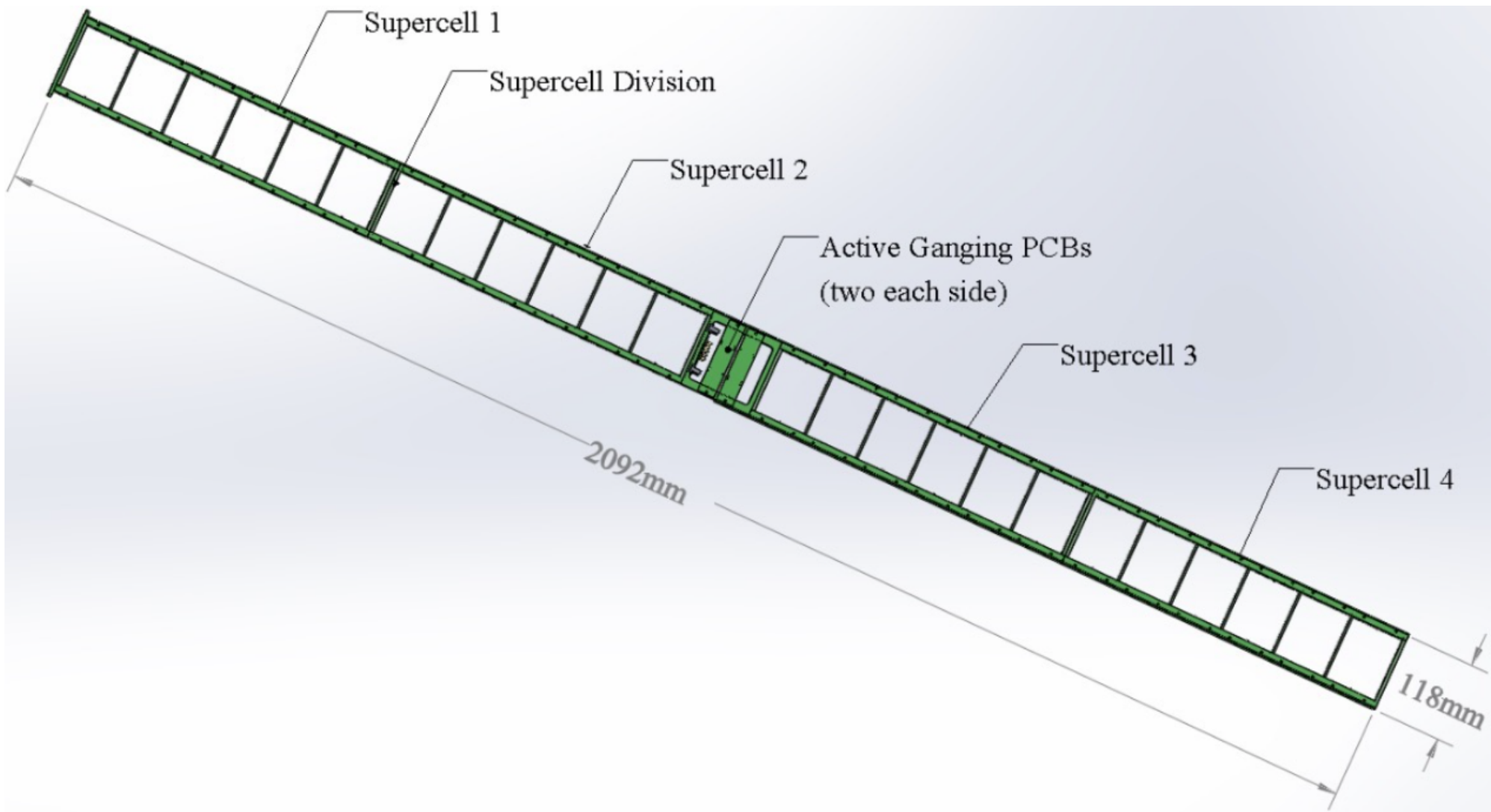

Supercell Specifications

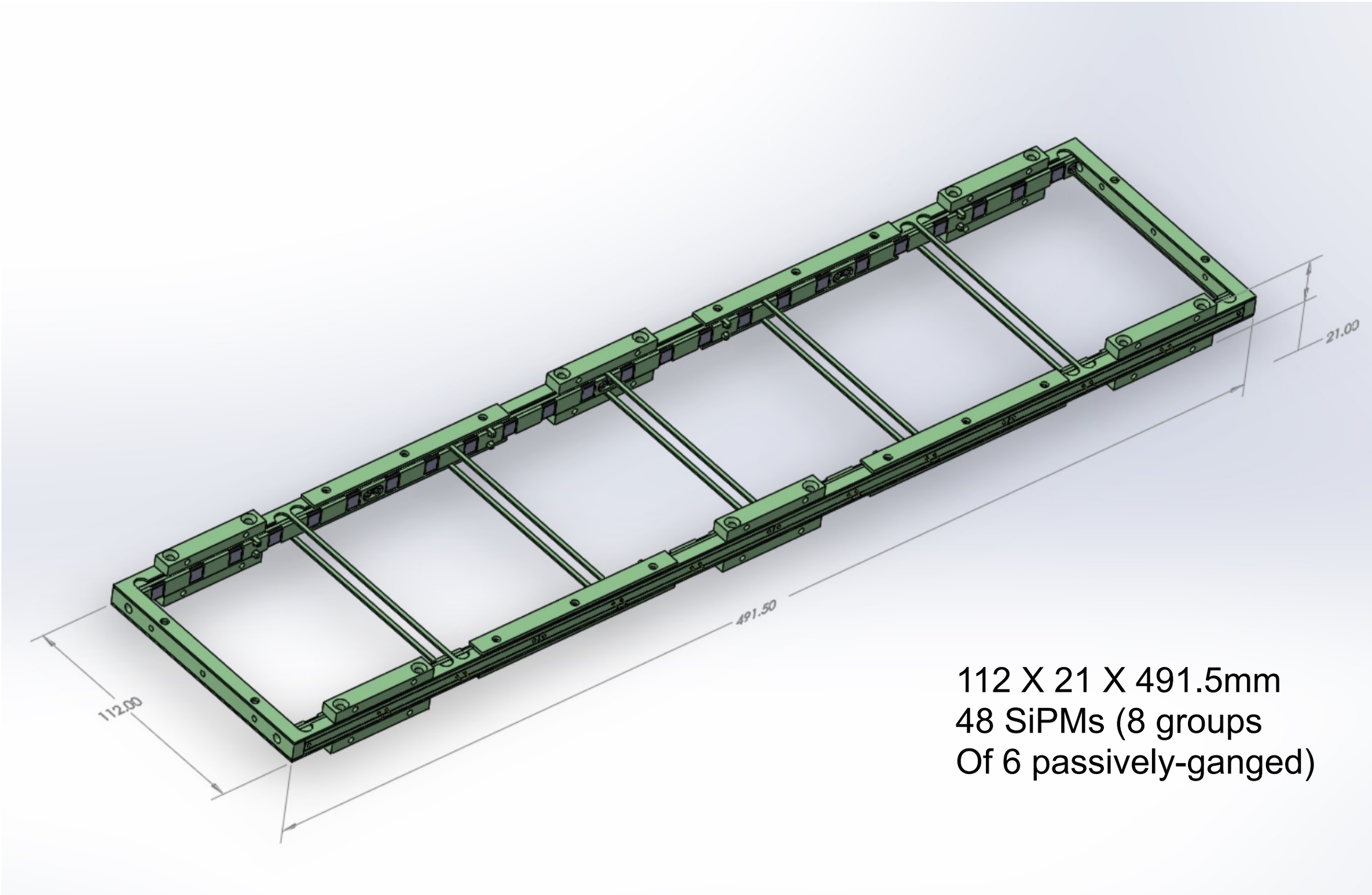

112 X 21 X 491.5mm
48 SiPMs (8 groups
Of 6 passively-ganged)

X-ARAPUCA Supercell Layout

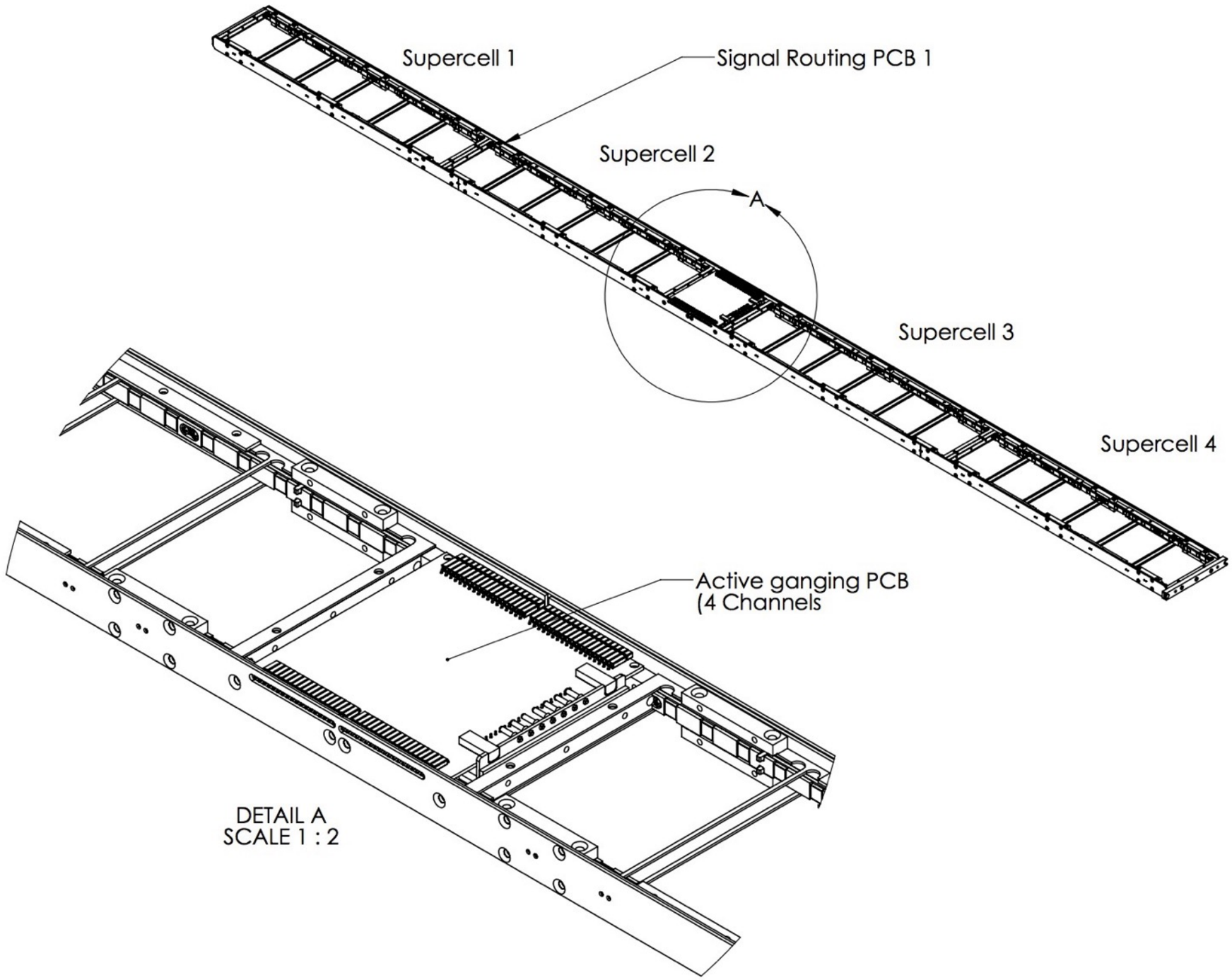

SiPM Mounting Board Assembly

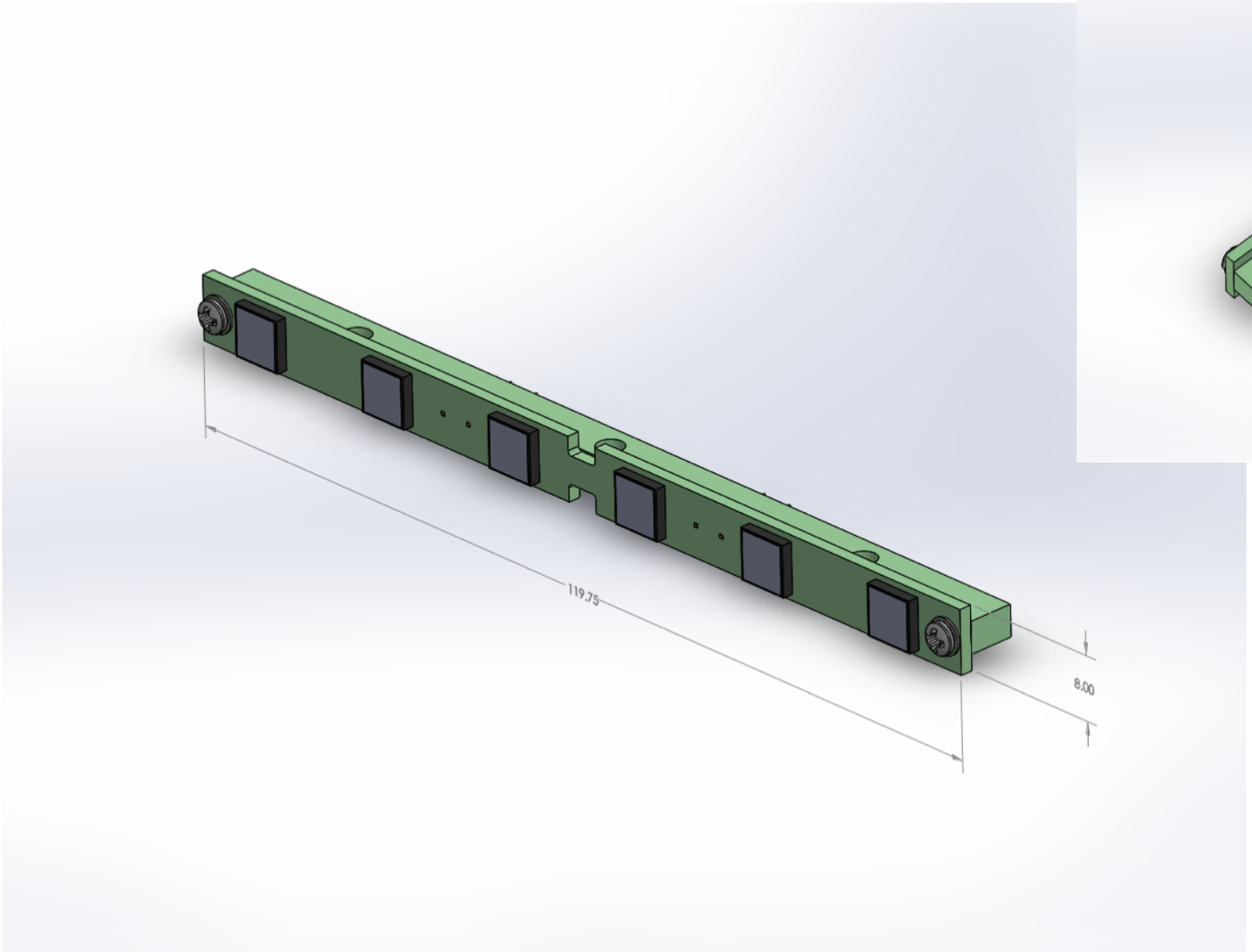

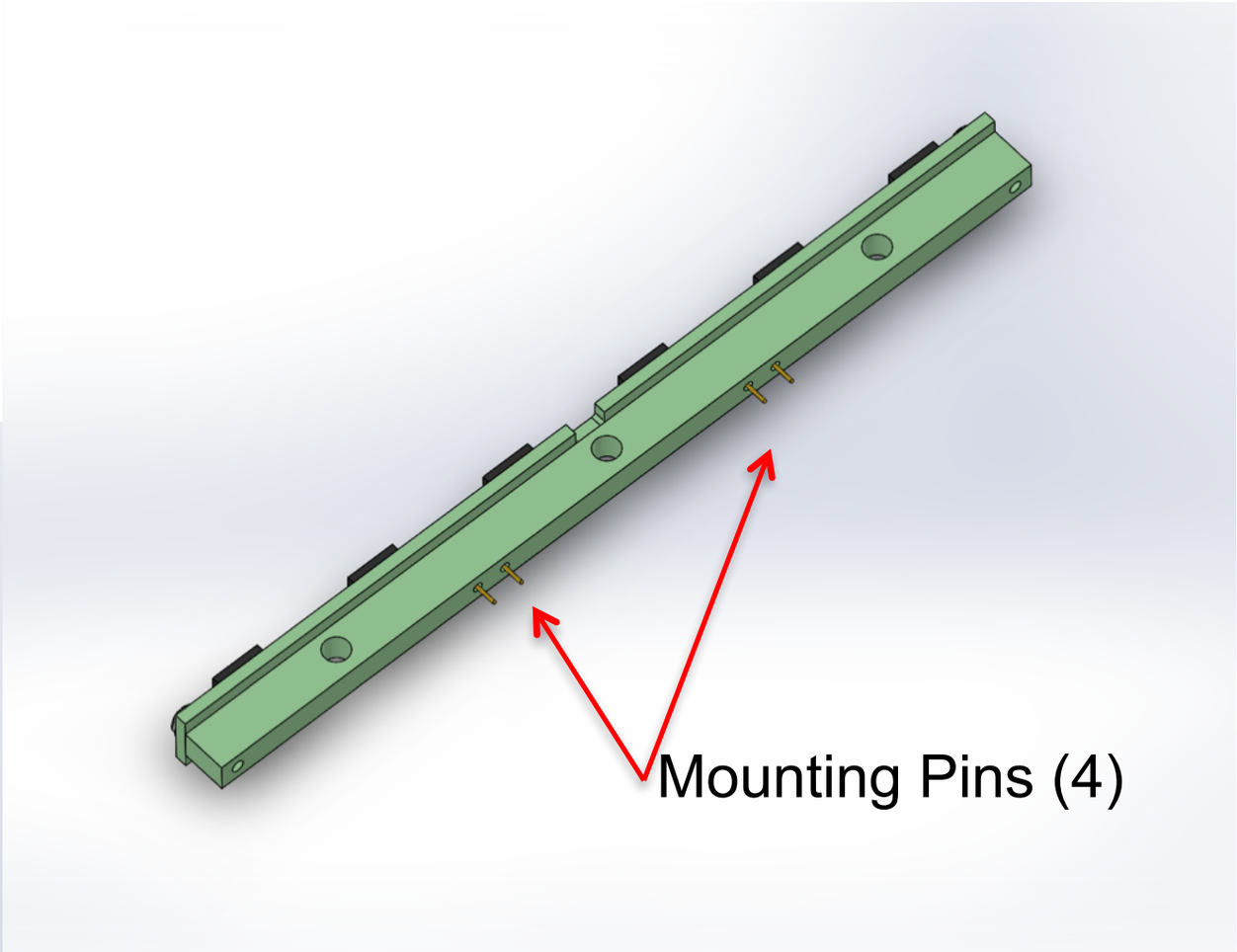

PD Module Side Routing PCB

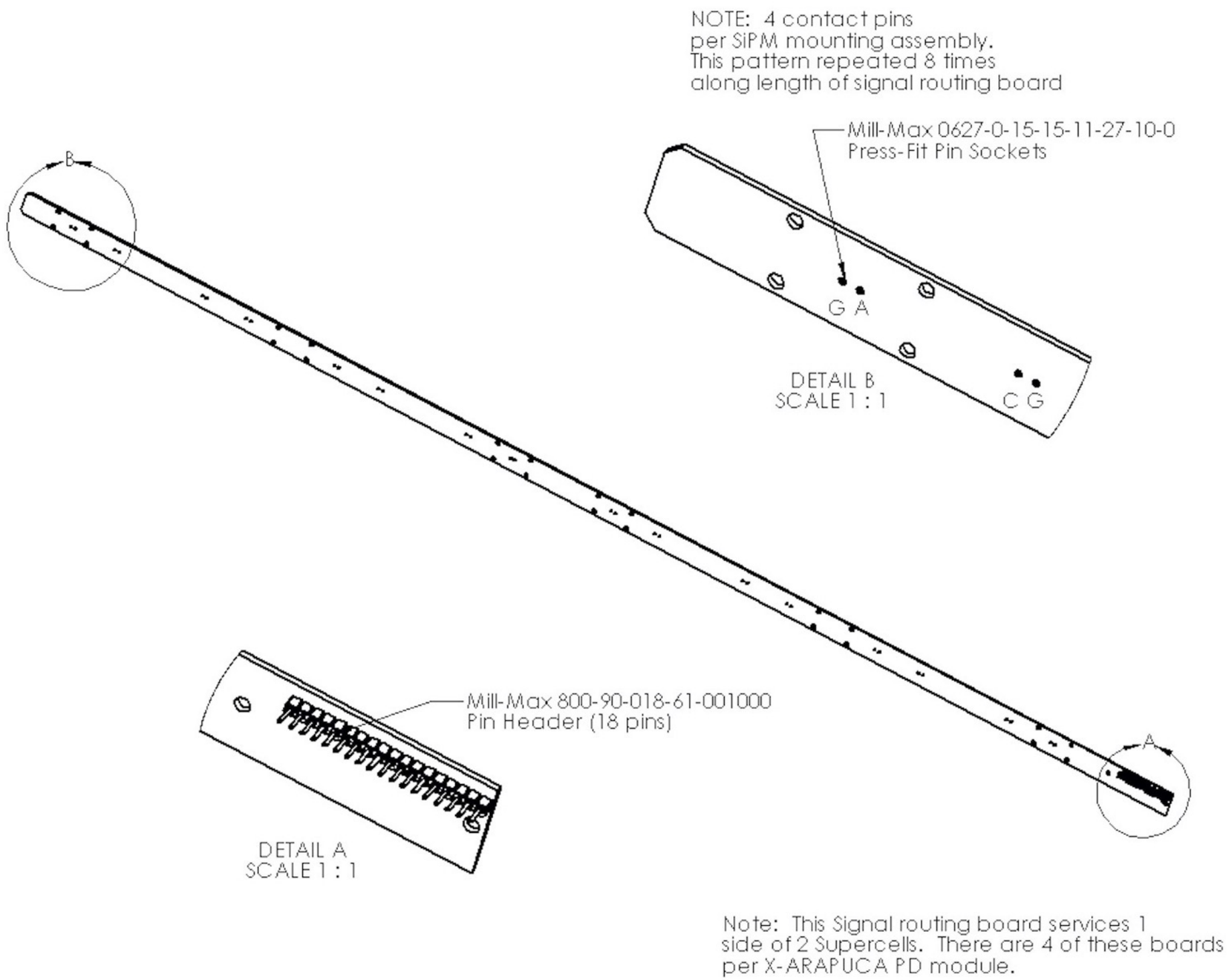

PD Module Side Routing PCB Assembly

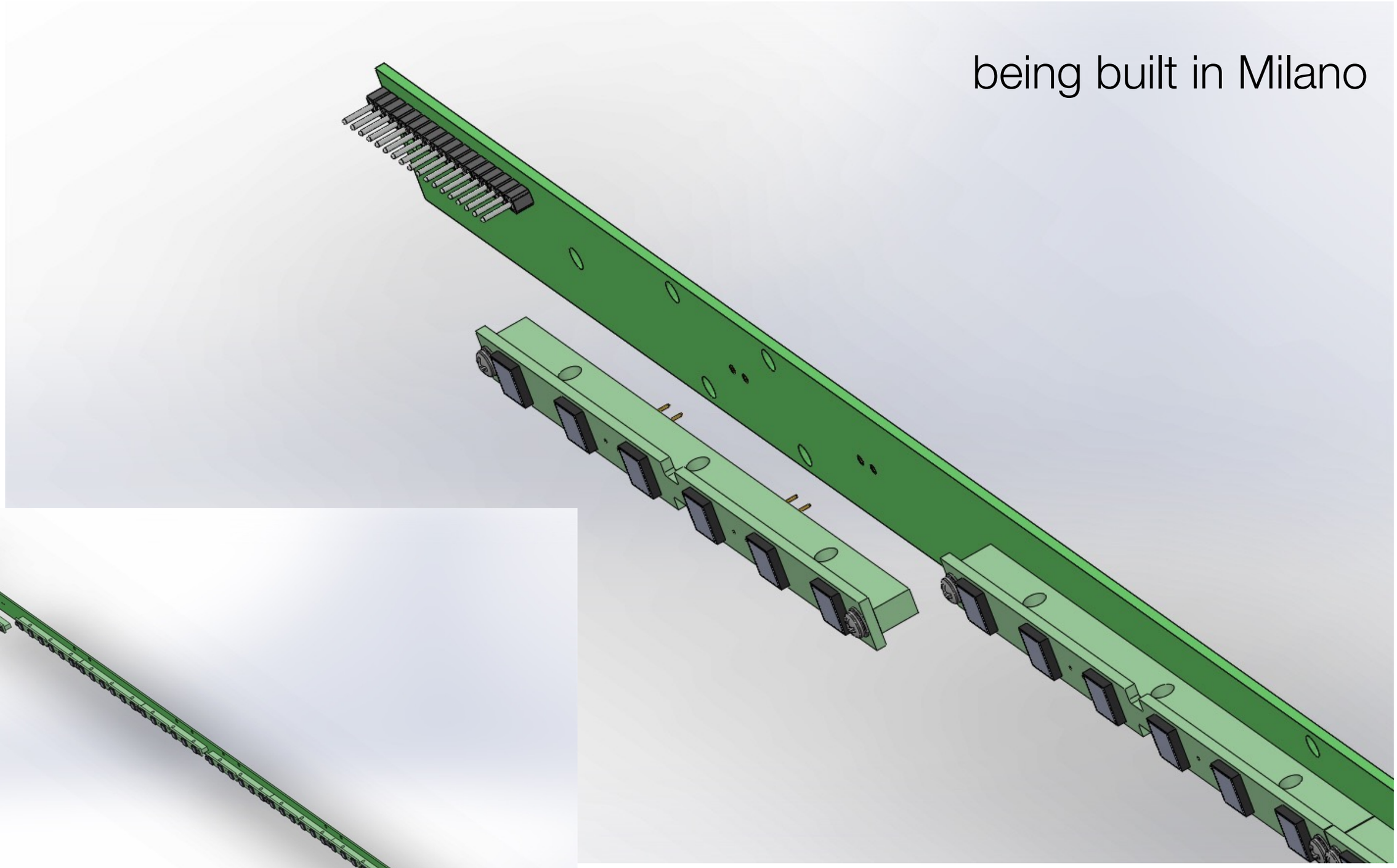

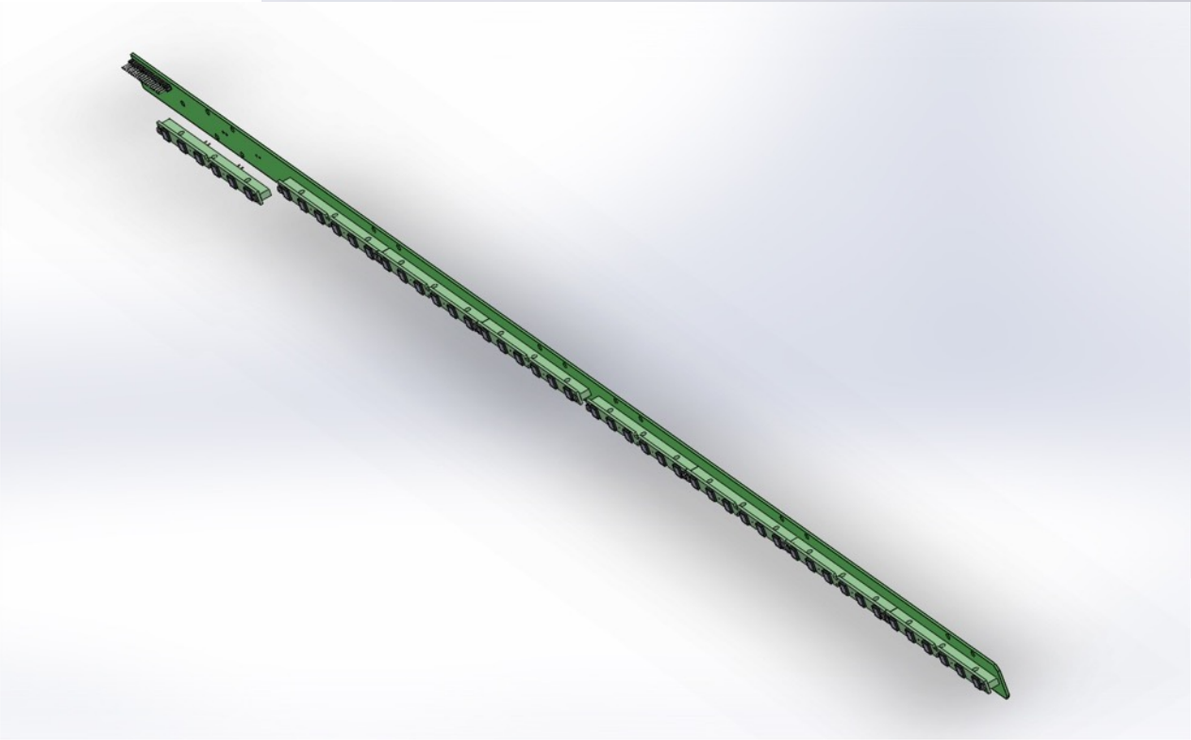

SiPM groups & activities

	Electronics	SiPM tests	ARAPUCA tests	mechanics
Milano Bicocca	ganging board and amplifier	tests in cold	dewar	
Milano			1.2 m dewar	mounting boards
Bologna & Ferrara		basic tests in cold	1 m dewar	
Prague		nothing yet		
Madrid		nothing yet	60 cm dewar	
Valencia	ganging board and amplifier	basic tests in cold		

Milano Bicocca

CARLA MARIA CATTADORI

Final results of Standard Field FBK SiPM characterization

- ✓ Characterization of tiles of 6 FBK NUV-HD-SF 4x4 mm². **Close to DUNE specs, but not compliant to DUNE form factor & still to be improved employing the NUV-HD-Cryo**
- ✓ SiPMs are coupled to a 2-stage cold amplifier BJT – THS4121,(F: 0.4 nV/√Hz at T=77 K) (see C. Gotti talks).

Cryogenic SiPM arrays for the DUNE photon detection system

arXiv:2001.09051v1
Submitted to NIMA

A. Falcone[a,*], A. Andreani[c], S. Bertolucci[b], C. Brizzolari[a], N. Buckanam[d], M. Capasso[f], C. Cattadori[a], P. Carniti[a], M. Citterio[c], K. Francis[e], N. Gallice[c], A. Gola[f], C. Gotti[a], I. Lax[b], P. Litrico[g], A. Mazzi[f], M. Mellinato[a], A. Montanari[b], L. Patrizii[b], L. Pasqualini[b], G. Pessina[a], M. Pozzato[b], S. Riboldi[c], P. Sala[c], G. Sirri[b], M. Tenti[a,b], F. Terranova[a], M. Torti[a], R. Travaglini[b], D. Warner[d], R. Wilson[d], V. Zutshi[a]

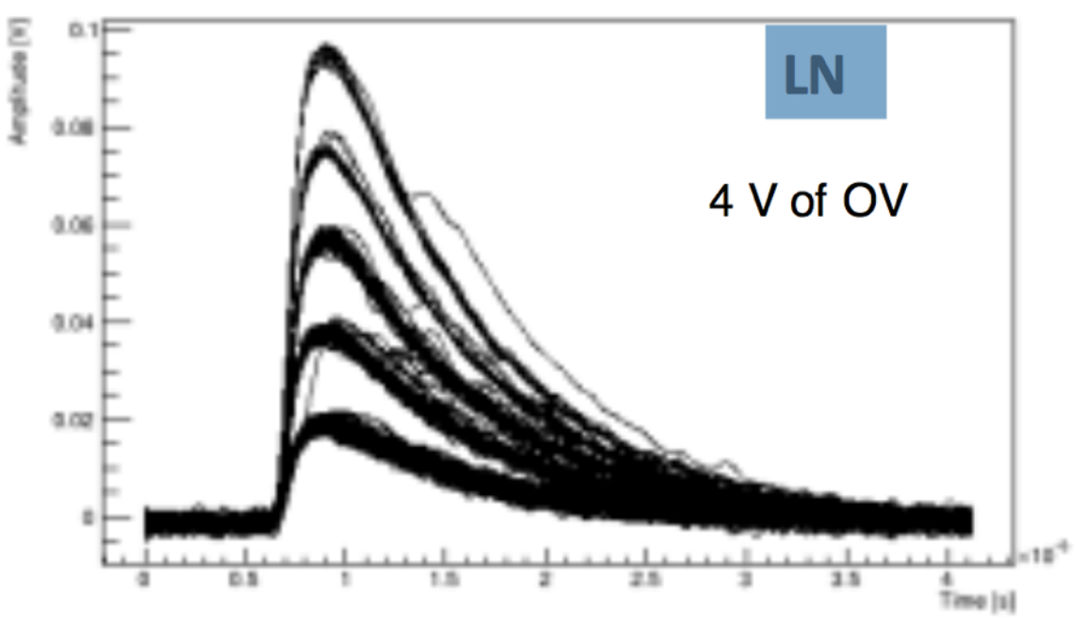

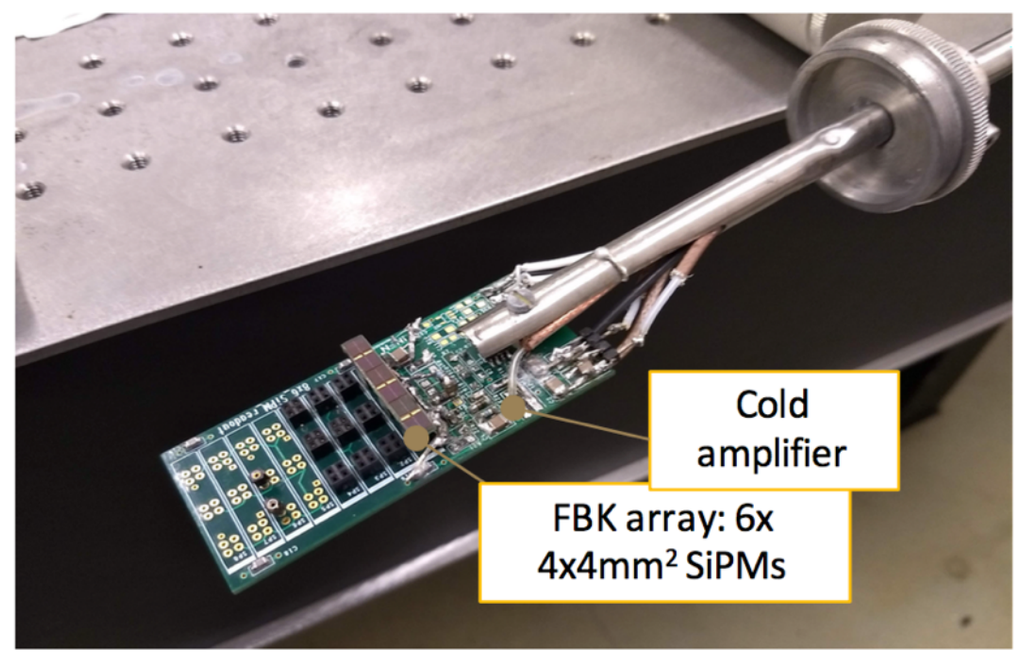

Milano Bicocca

Test stand to integrate & optimize X-Arapuca & SiPM &FE

- Vacuum & Cryogenic Chamber to liquefy 6N Ar gas by external cryogenic LAr bath
- Pressure, Vacuum and LAr level readout
- Electrical feedthrough vacuum tight providing electrical contacts
- Chamber volume:
  - ~5 l (Φ :15 cm x h: 30 cm)
- Goal: Test the whole photodetection chain [**SiPMs (FBK/Hama) & X-Arapuca & FE & Digital electronics**] for optimization purposes, with an easy to go system
- Test different configurations of SiPMs coupling to X-Arapuca (short side/long-side etc.) and SiPM ganging etc.

C.M.CATTADORI 7

Milano Bicocca

Forthcoming test program @MiB

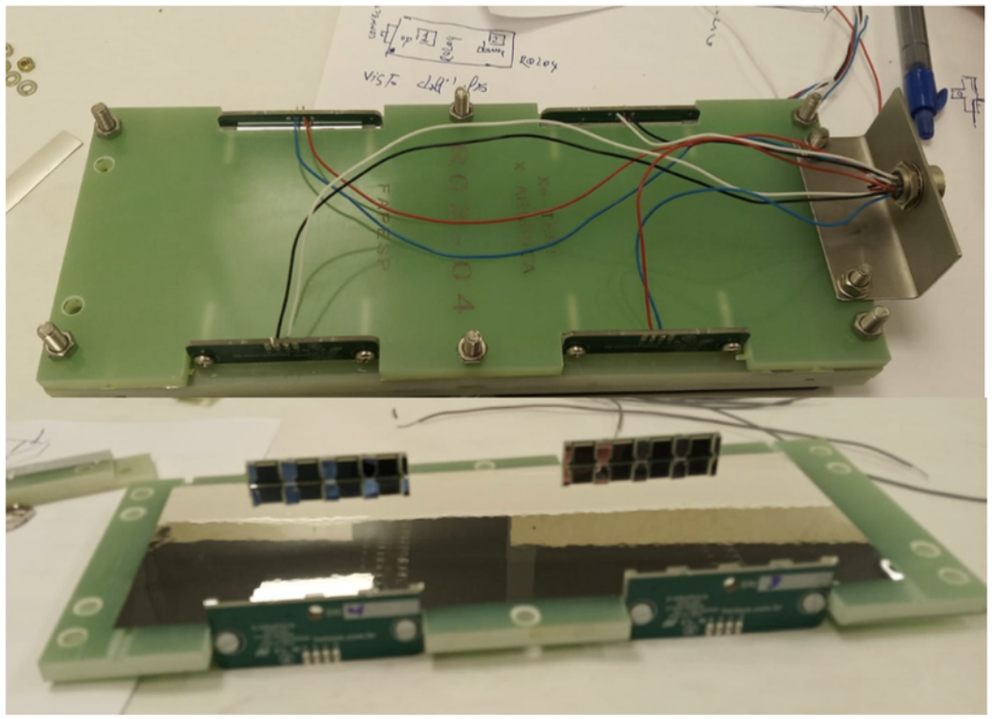

- Assemble X-Arapuca (still few missing parts)
  - ✓ Hamamatsu sensors (s14160-5060HS) and FBK
  - ✓ New amplifiers board based on THS4531 OPAMP
  - ✓ WLS plate (from Campinas)
  - ✓ Dicroic filter plate (from Campinas)
  - ✓ 12/02/2020 delivery of purchased Eljin WLS plates: extraordinary long times both for commercial offer & delivery
  - ✓ Board for SiPMs (1 still missing?)
- Install X-Arapuca in test chamber & start tests
- Test new FE board with upgraded amplifier and ganging scheme
- Couple the FE to the SSP digital boards
- Available in Lab Other (CAEN 250MHz with PSD algorithms on board) Digitizers and scopes

30/01/20 C.M.CATTADORI 11

Milano Bicocca

Facility for SuperCell test

- Available: dewar equipped with fittings, insertion system, glove box on top etc.
- "Useful" internal height 568 mm (Supercell length 500 mm)
- Neck diameter 150 mm (Supercell width 118 mm)
- LAr Volume 70 l
- Flange, electrical connectors, gas&liquid inlet/outlet available
- During the december '19 meeting held at MiB, all interested/involved people visited lab and looked at the facility
- For 60% Review the Test of a SuperCell:
  - Functional test
  - Relative measurements: scan with LED, α-source

30/01/20 C.M.CATTADORI 12

Bologna & Ferrara

Alessandro Montanari

Standard measurement setup

- The present Bologna setup can be used as a reference for test of O (100) devices

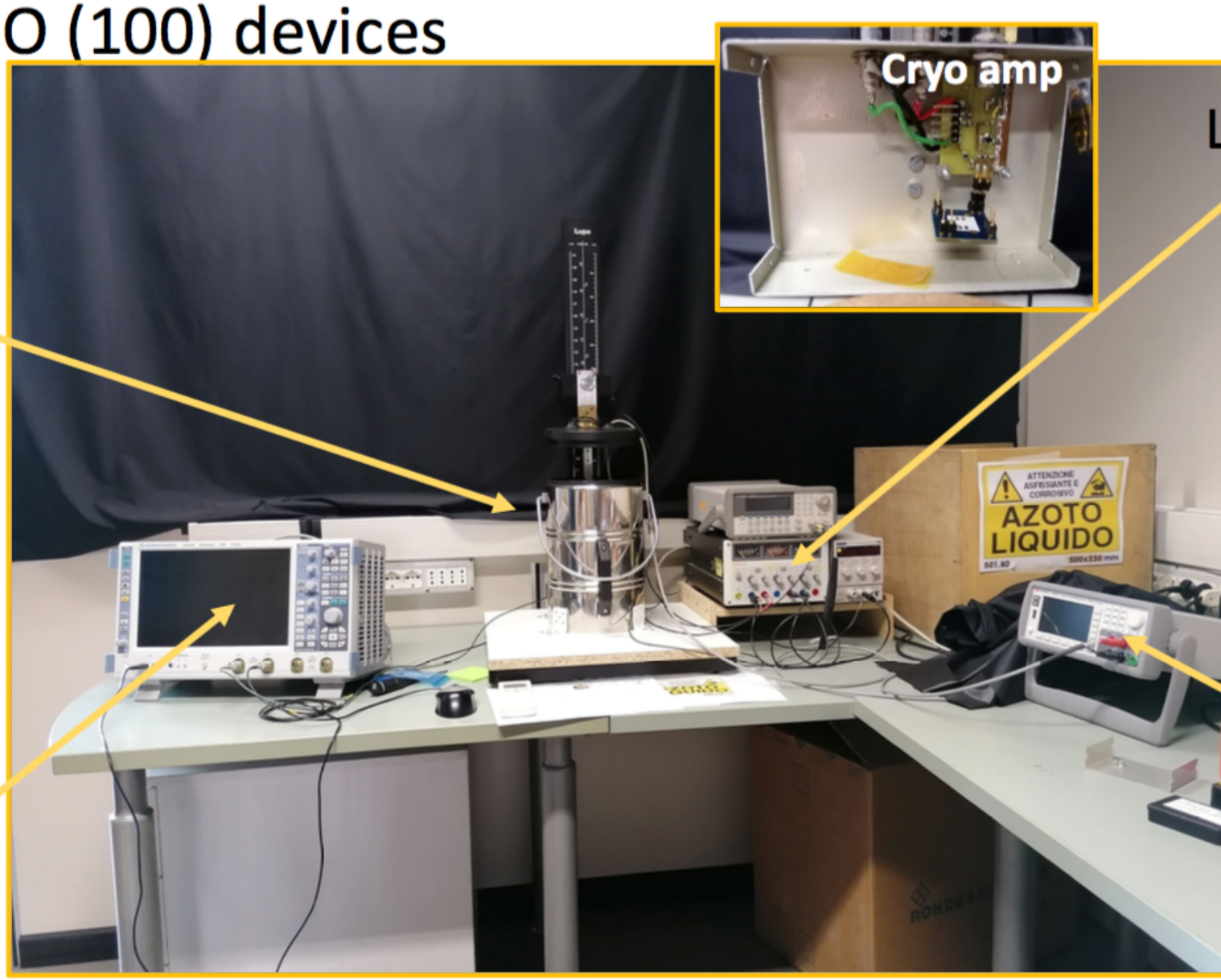

6 L DEWAR

Low Power, SiPM bias

Digital Scope

SOURCE METER

Bologna & Ferrara

Measurements

At Room/LN temp:

- Thermal cycles (>=20) -> **test of packaging/solders**

At LN temp:

- I-V curve Forward bias -> R_quenching
- I-V curve Backward bias -> **V_breakdown**
- **Dark count rate**
- Photoelectron response
- Crosstalk and afterpulse

Bologna & Ferrara

Ideas for mass test system

Requirements:

- O(100) channels
- Operate at LN temperature
- Perform **I-V curves**
  - pA resolution, ~25 mV step, -60 to +2 Vbias
- Measure **DCR**
  - <5% uncertainty at 1 Hz

ProtoDUNE-SP Phase II

- From 6 to 4 APAs
- 40 arapuca modules
- 7680 SiPMs

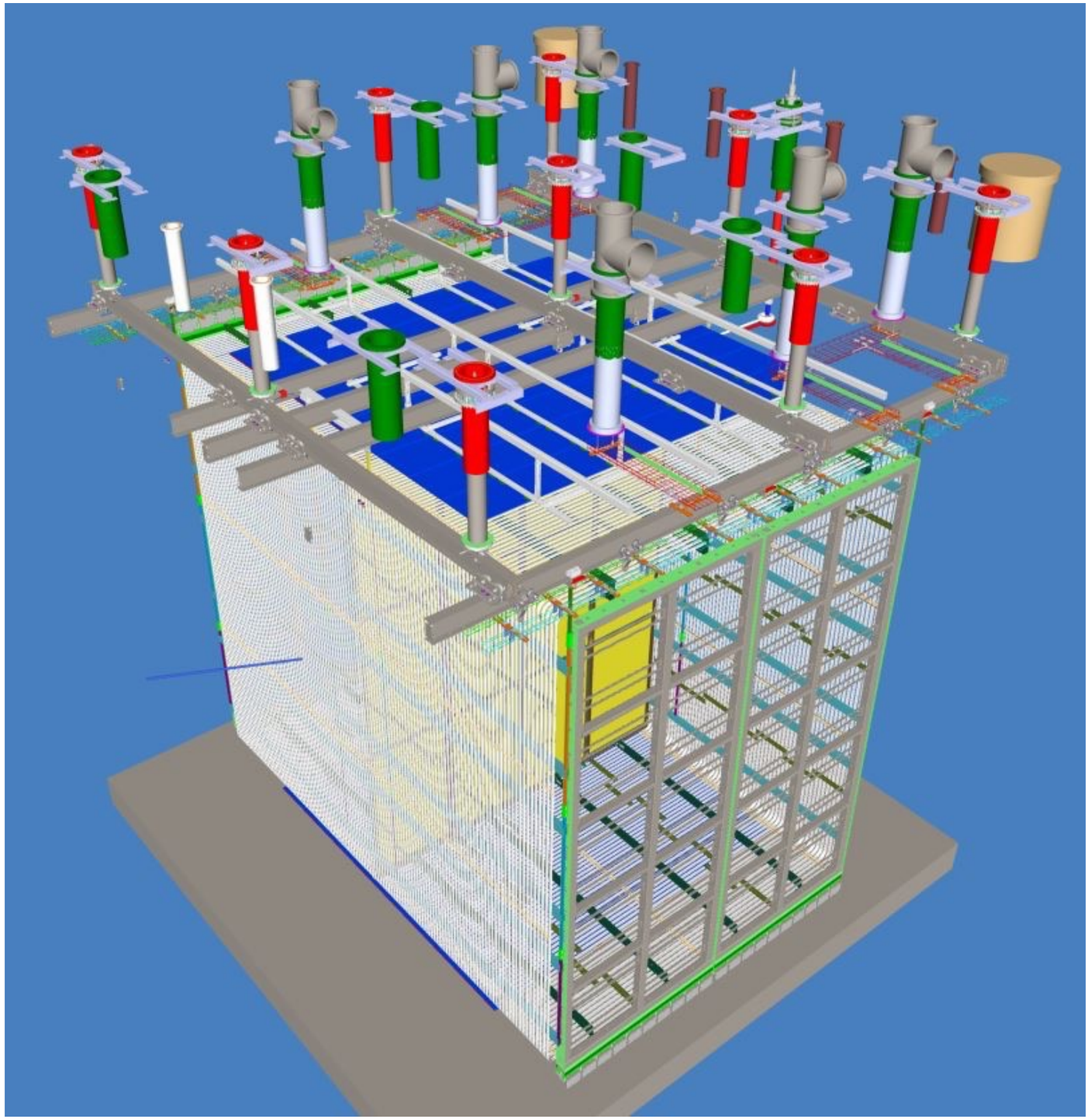

ProtoDUNE-SP installation

	2020												2021												2022			
	Jan	Feb	Mar	Apr	May	Jun	Jul	Aug	Sep	Oct	Nov	Dec	Jan	Feb	Mar	Apr	May	Jun	Jul	Aug	Sep	Oct	Nov	Dec	Jan	Feb	Mar	Apr
ProtoDUNE 2 Trial Assembly																												
Build first HV FC prototypes																												
Order materials/fabricate Module 0 components																												
Module 0 ProtoDUNE 2 FC delivered																												
Module 0 ProtoDUNE 2 CPA,EW delivered																												
Full scale ProtoDUNE 2 installation tests																												
ProtoDUNE 2 CERN										Ash River Average 2 FTE									Ash River Average 2 FTE									
Disassembly TCO drift volume																												
Open TCO																												
Remove ProtoDUNE-SP TPC																												
Cryostat Mods, clean roon																												
Install ProtoDUNE 2-SP Detector																												
Close TCO																												
Fill Detector																												

Our plans

- R&D on cold electronics amplifier & ganging
- SiPM characterization in warm and cold
- Help with ProtoDUNE-SP installation
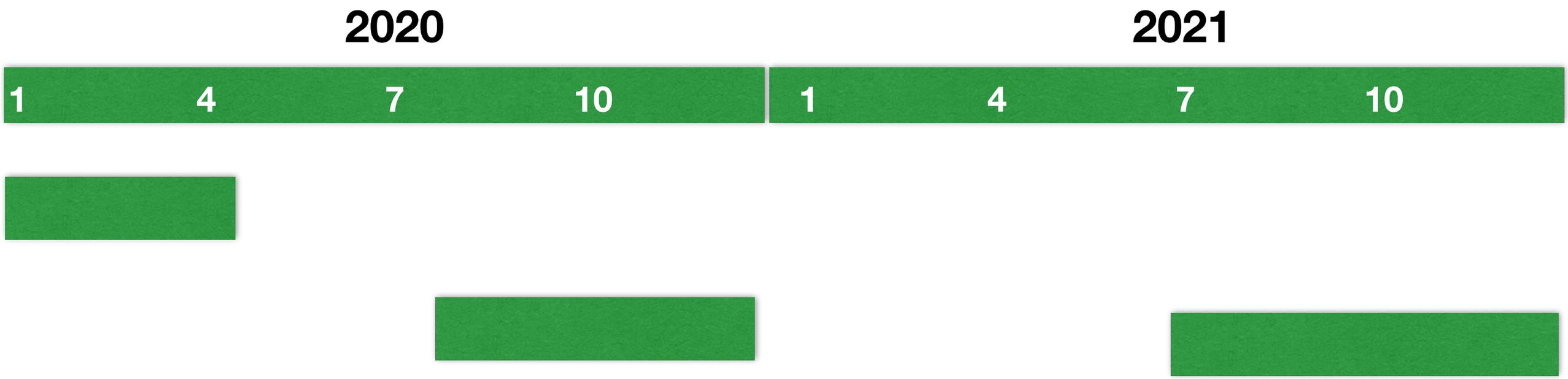
Timeline